IT-DUMPS Q&A

Accurate study guides, High passing rate!
IT-dumps provides update free of charge in one year!

http://www.it-dumps.com

Exam : **HP0-J54**

Title : Advanced SAN Solutions

Version : Demo

1.DRAG DROP

Click the Task button. Assuming that distributed data access is required, assign the correct performance levels to the given topologies.

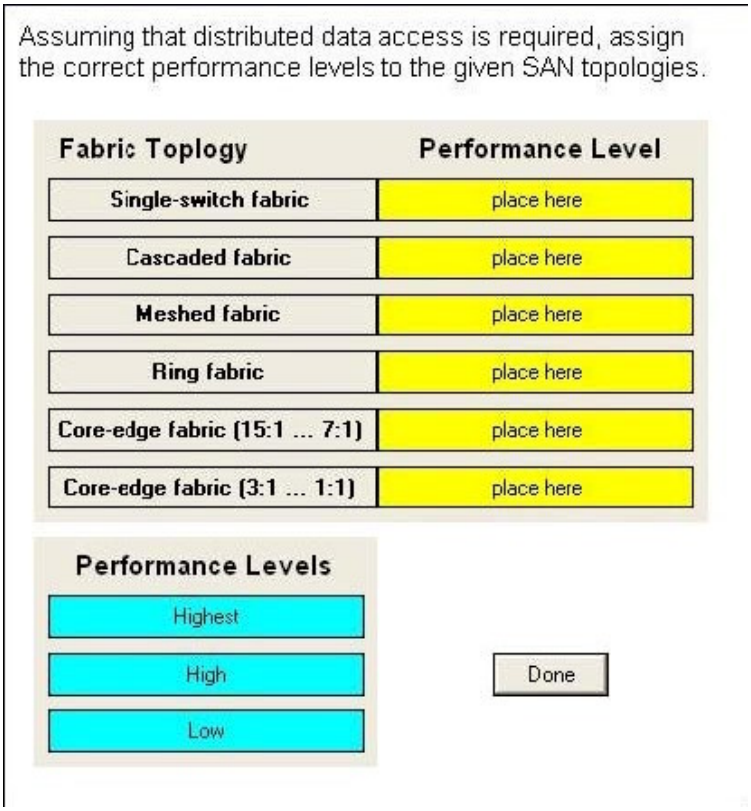

Answer:

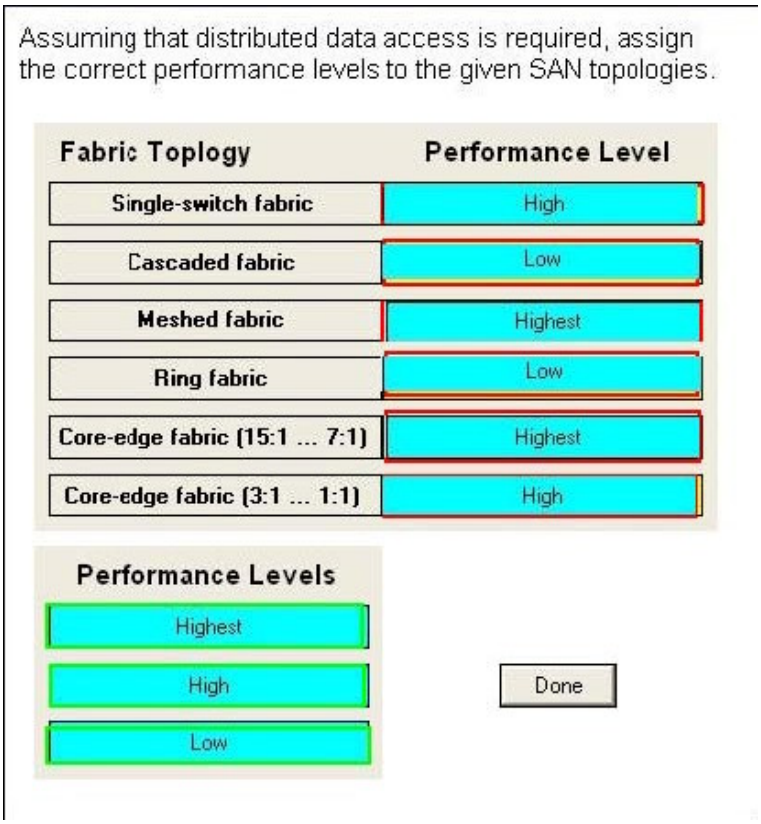

2.During an assessment of a B-Series SAN switch, a SAN architect notices that the switch is partitioned into a set of logical switches. What is the name of this feature.?
A. Inter VSAN routing
B. Transparent Routing
C. Virtual Fabric
D. VSAN
Answer: C

3.What is the primary factor to be considered when sizing the replication link between HP D2D backup systems?
A. blackout window length
B. WAN link efficiency
C. minimum reverse replication bandwidth
D. change rate of application data
Answer: D

4.In addition to considering application data change rate, what must you do to accurately calculate the total change rate for replicated data? (Select two.)
A. Identify correct buffer credits.
B. Measure the number of write IOPS.
C. Determine the partition offset.
D. Estimate the average block size.
E. Verify RAID stripe step size.
Answer: B,D

5.Which replication protocols can be used on an HP Enterprise Virtual Array system using Continuous Access EVA and current firmware? (Select two.)
A. HP FCIP
B. HP SAS-FCP
C. HP FC
D. HP SCSI-FCP
E. HP SAS
Answer: C,D

6.Click the Exhibit button.

Your customer is looking for a new infrastructure solution for their main data centers and four branch offices. The solution should consist of a standardized server, storage, backup and hypervisor infrastructure.

The main data centers are in two major cities 60km apart. The branch offices are located nationwide. The main centralized hosted applications are an ordering system running on a Microsoft SQL database and Microsoft Exchange 2010. The branch offices host a dedicated fileserver for each location, which is used for the local Data Protector cell.

A recent database crash resulted in lost transactions for three days. The company estimates it lost approximately $200K in sales. The most recent tape backup was corrupted and the company had to revert to a previous backup resulting in loss of data for an extra day. As a result of this disaster, the CEO requests a disaster recovery strategy be created and implemented using HP StoreOnce 2504i systems in the branch offices.

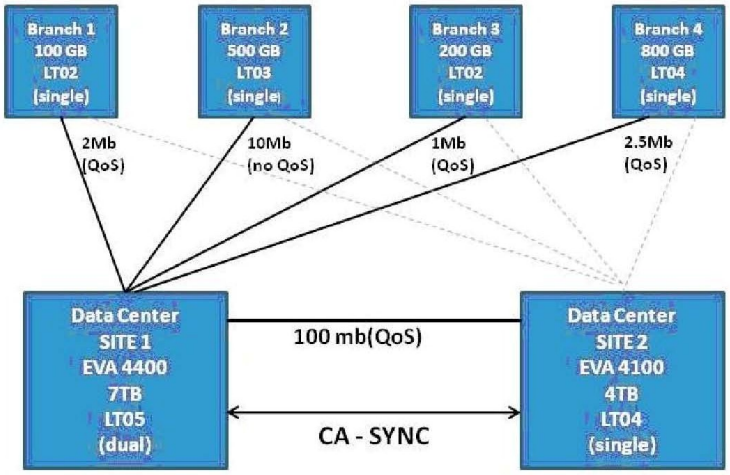

What is the most likely cause of the tape corruption?

A. compression rate of the source data

B. feed speed to the tape drive

C. file structure of the backed up data

D. CRC checks after the backup

Answer: B

7.Which factor must you consider when you calculate the buffer credits for links between distant fabrics?

A. dispersion

B. transceiver type

C. latency

D. attenuation

Answer: C

8.Click the Exhibit button.

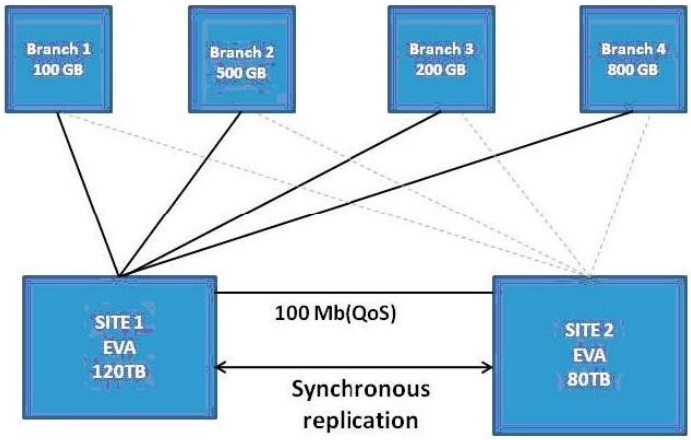

Which factors need to be considered when calculating the change rate for replication? (Select two.)
A. queue depth
B. data compressibility
C. partition alignment
D. network bandwidth
E. link latency
Answer: D,E

9.DRAG DROP
Click the Task button. The customer is concerned about SAN security. Match each attack class to its description.

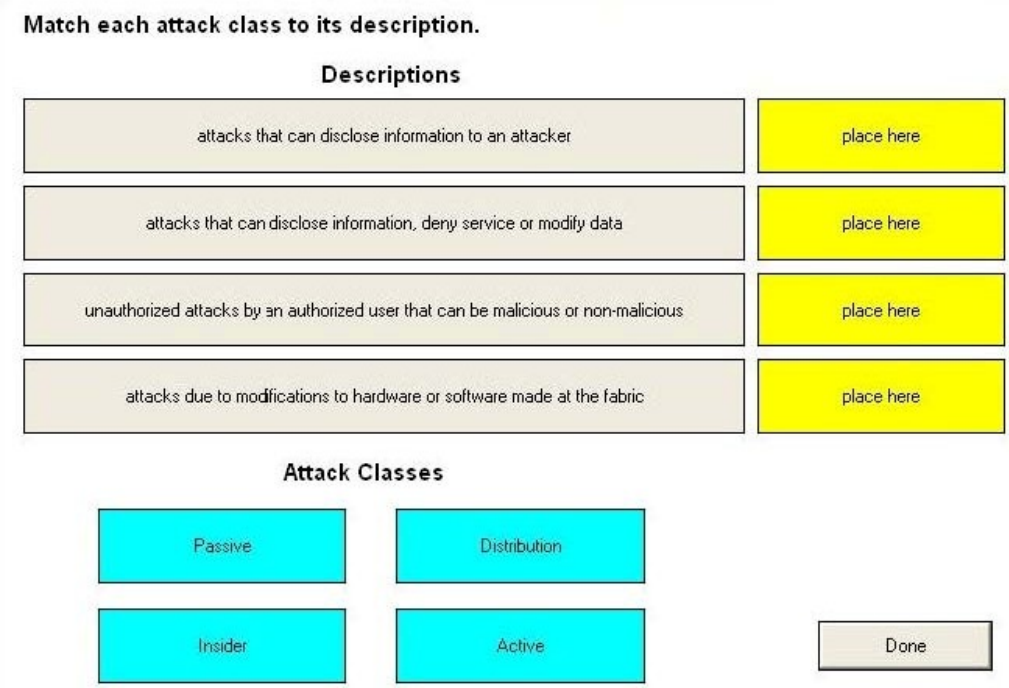

Answer:

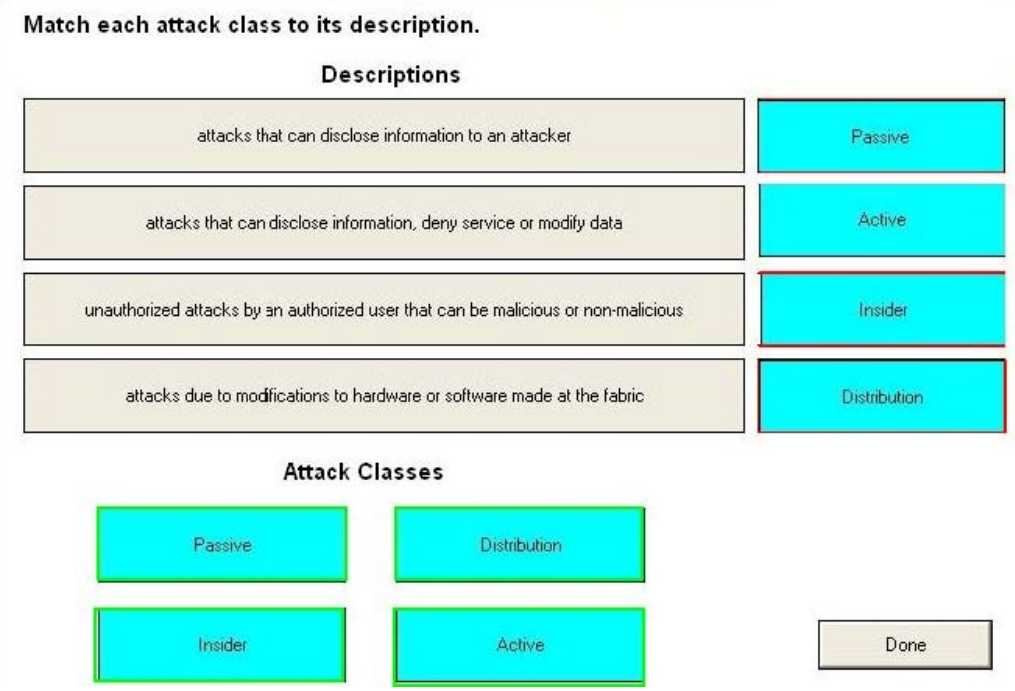

10.Which Converged Enhanced Ethernet (CEE) feature distinguishes between traffic types to avoid congestion due to bursting traffic sources?

A. Enhanced Transmission Scheduling (ETS)

B. Congestion Notification (QCN)

C. Priority-based Flow Control (PFC)

D. Data Center Bridging Exchange (DCBX) Protocol

Answer: C