IT-DUMPS Q&A

Accurate study guides, High passing rate!
IT-dumps provides update free of charge in one year!

http://www.it-dumps.com

Exam : **HP0-J12**

Title : Supporting ESL E-Series and EML E-Series Libraries

Version : Demo

1. Click the Exhibit button.

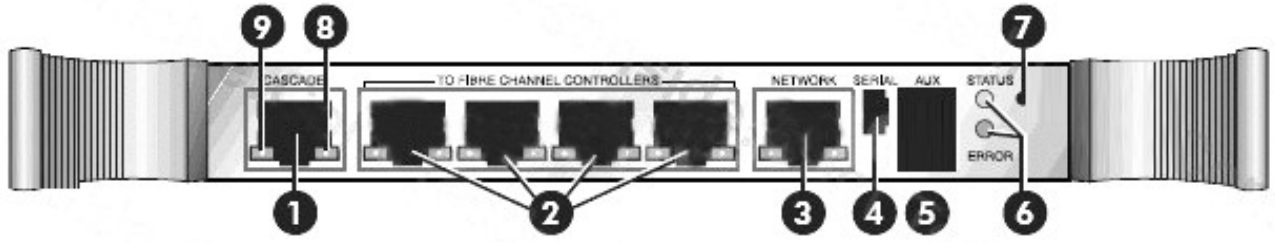

Which ESL E-Series tape library component does the exhibit display?

A.cluster controller

B.cabinet controller

C.Interface Manager

D.Interface Controller

Answer: C

2. What must be configured in CommandView TL when manually adding an ESL E-Series library?

A.library IP address

B.library serial number

C.tape drive and robot SCSI IDs

D.Interface Manager user name and password

Answer: A

3. What are the main considerations when choosing a location for an EML E-Series tape library? (Select three.)

A.floor space

B.room height

C.power requirements

D.lighting requirements

E.grounding requirements

F.distance to disk storage

Answer: ACE

4. What is the hard wired IP address of the Interface Manager card in an EML E-Series tape library on the private network?

A.1.1.1.1

B.10.0.0.1

C.192.168.2.1

D.155.155.155.1

Answer: C

5. What are possible causes of inventory failure in ESL E-Series tape libraries? (Select two.)

A.The library has a drive failure.

B.One of the clusters is disconnected.

C.The library front is facing bright sunlight.

D.Unapproved bar code labels are being used.

E.The Interface Controller is disconnected from the Fibre Channel switch.

Answer: CD

6. What can you do to speed up the power-on process while troubleshooting an EML 71e library?

A.Remove all media from the library.

B.Power-on the library with the load port door open.

C.Disable the auto audit, remembering to re-enable it and reboot the library before leaving the customer site.

D.Configure inventory mode to bar code labels not required, remembering to reset bar code labels required before leaving the customer site.

Answer: C

7. Which parts of the Extended Tape Library Architecture are SNIA compliant and support the Storage Management Initiative Specifications (SMI-S)? (Select two.)

A.Secure Manager

B.Interface Manager

C.Interface Controller

D.Robotics Controller

E.Command View Tape Library

Answer: BE

8. Which HP document provides the most current, supported configurations for Enterprise class libraries in a SAN environment?

A.Service Guide

B.SAN Design Guide

C.EBS Compatibility Matrix

D.training course documentation

Answer: C

9. What are advantages of using Secure Manager EML? (Select two.)

A.It allows library partitioning.

B.Management of direct backup is allowed.

C.It provides faster access to tape devices.

D.Device level mapping is easily configured.

E.User access management is easily configured.

Answer: AD

10. Click the Exhibit button.

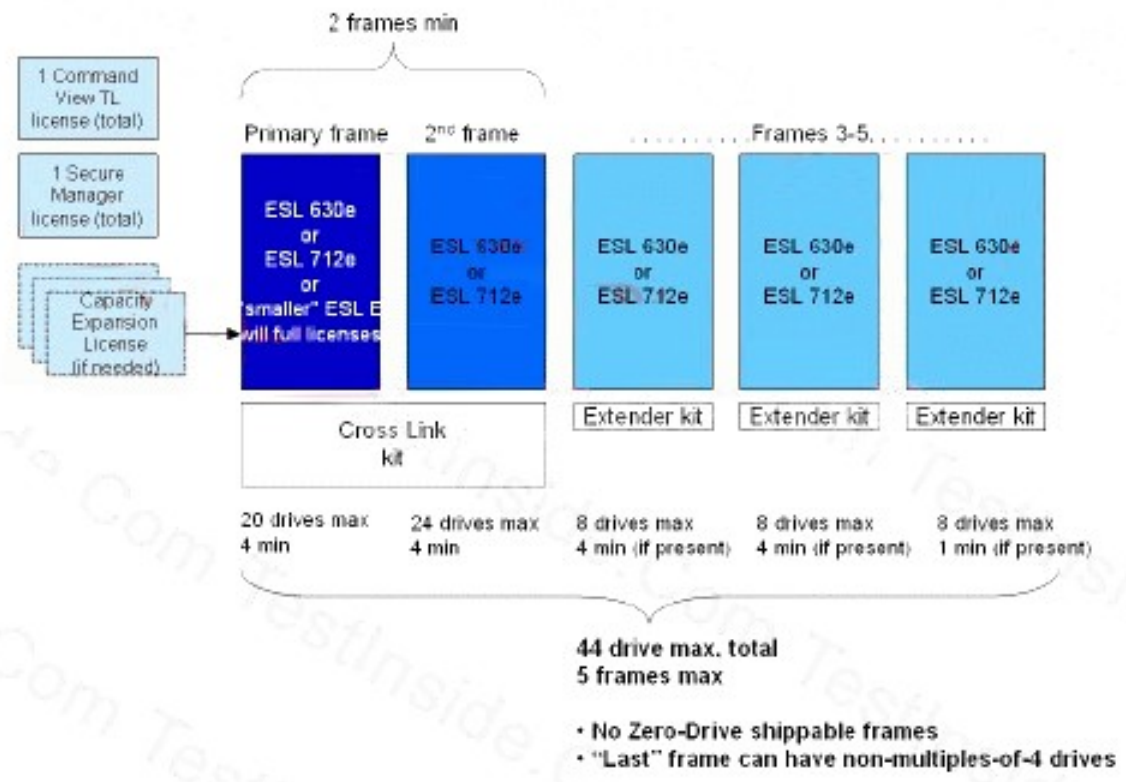

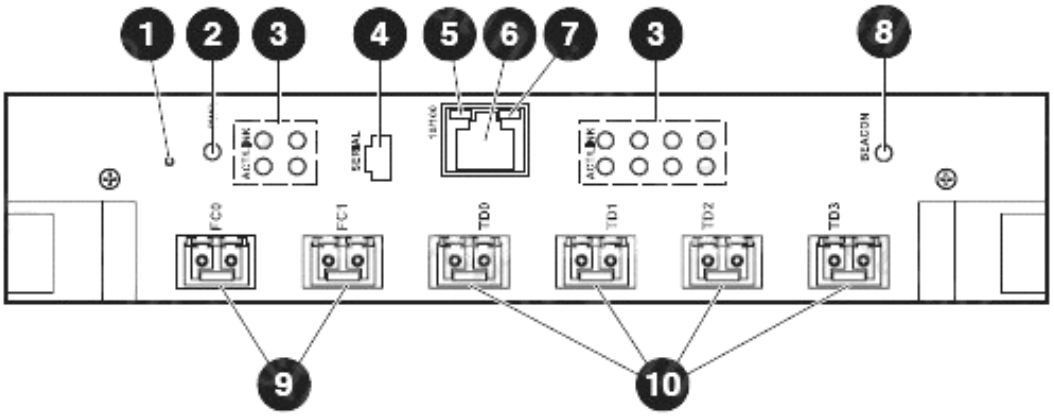

What is the maximum supported number of drives that can be installed in a CLM configuration?

A.40

B.44

C.60

D.64

Answer: B

11. What does the cabinet controller assembly of an ESL E-Series tape library provide a SCSI interface

to?

A.tape devices

B.library robotics

C.management interface card

D.e2400-160 Interface Controller

Answer: B

12. What is reported by the LP/PNL sensor of an ESL E-Series tape library?

A.library door status

B.x-axis motor position

C.y-axis motor position

D.magazines and load ports status

Answer: D

13. What is the purpose of the Stop button on the Operator Control Panel of ESL E-Series tape libraries?

A.to halt the robotics

B.to restart the library

C.to shut down the library

D.to pause a running backup process

Answer: A

14. Click the Exhibit button.

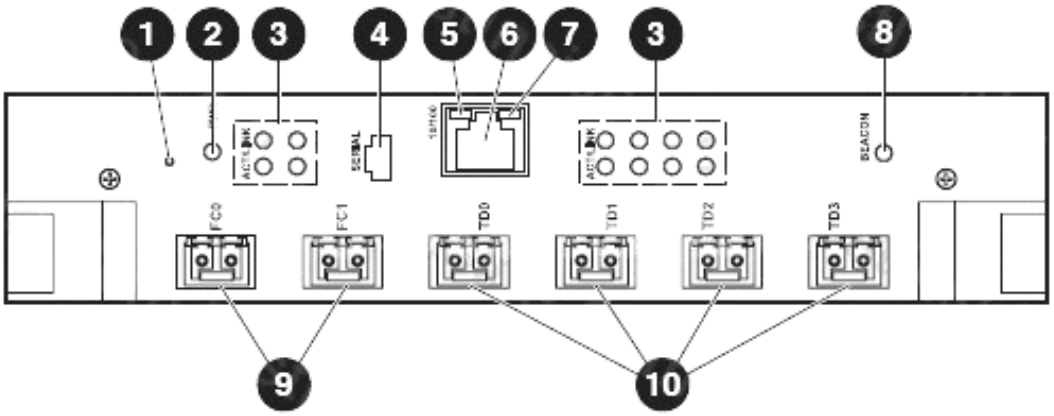

In the exhibit, which item number represents the host Fibre Channel connections?

A.4

B.6

C.9

D.10

Answer: C

15. Which tape device attribute does the ESL E-Series tape library Interface Manager use to determine the physical location of each tape drive in the library?

A.bus number

B.SCSI address

C.serial number

D.drive slot position

Answer: C

16. Click the Exhibit button.

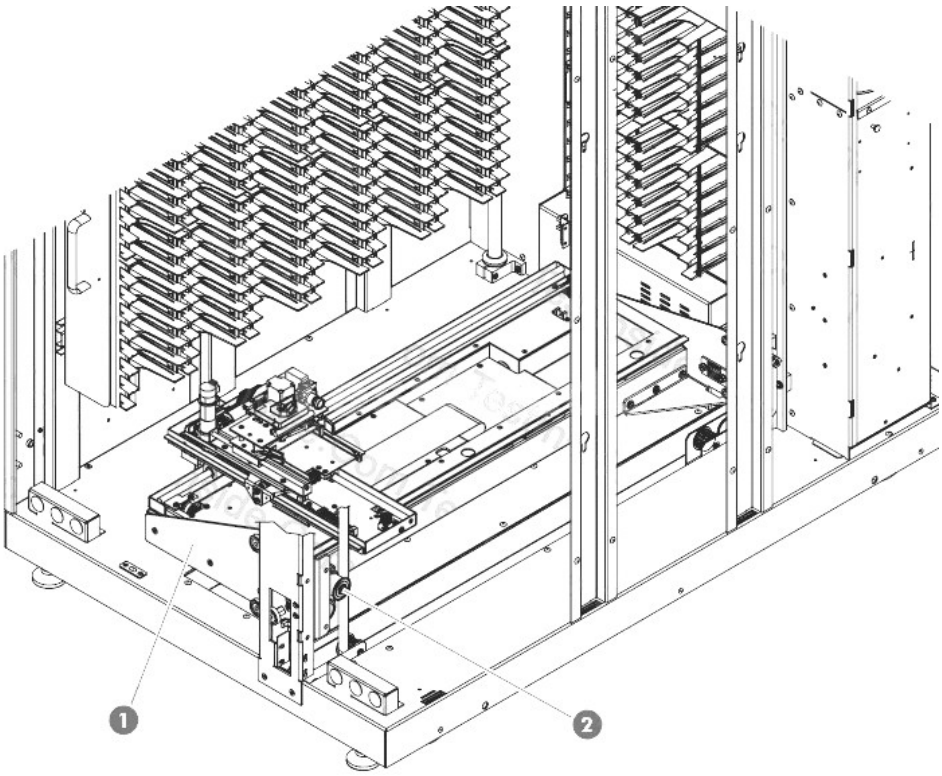

What does Number 2 on the exhibit represent?

A.x axis motor

B.y axis motor

C.optical scanner

D.home position sensor

Answer: B

17. Click the Exhibit button.

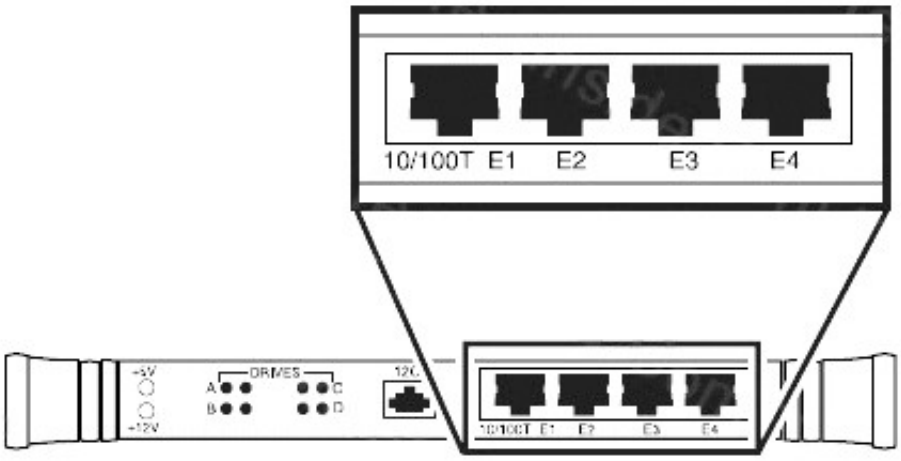

Which component is connected to port E1 of the cluster controller if it is in drive cluster 0 of an ESL E-Series tape library?

A.cabinet controller

B.Interface Controller

C.lower cluster controller

D.Interface Manager card

Tape Library

Answer: A

18. Click the Exhibit button.

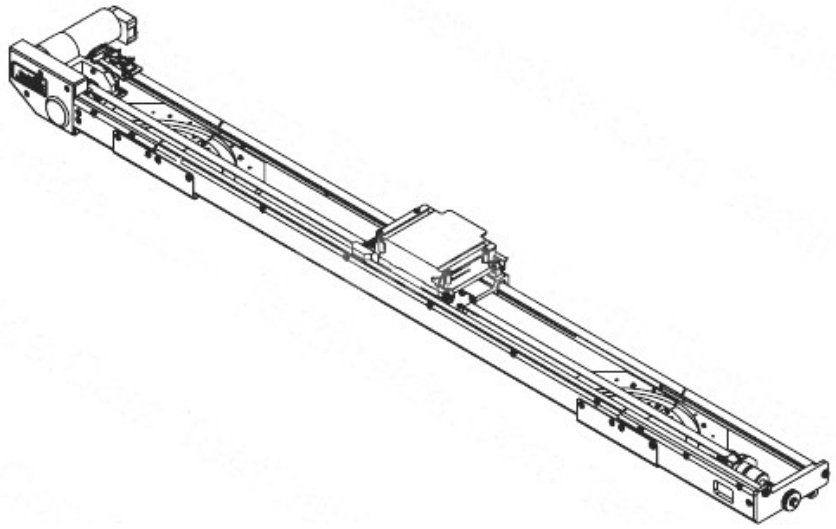

Which ESL E-Series tape library component (used to carry data cartridges to a secondary cabinet) is shown in the figure?

A.CLM arm

B.CLM controller

C.picker assembly

D.cartridge transfer robot

Answer: A

19. Click the Exhibit button.

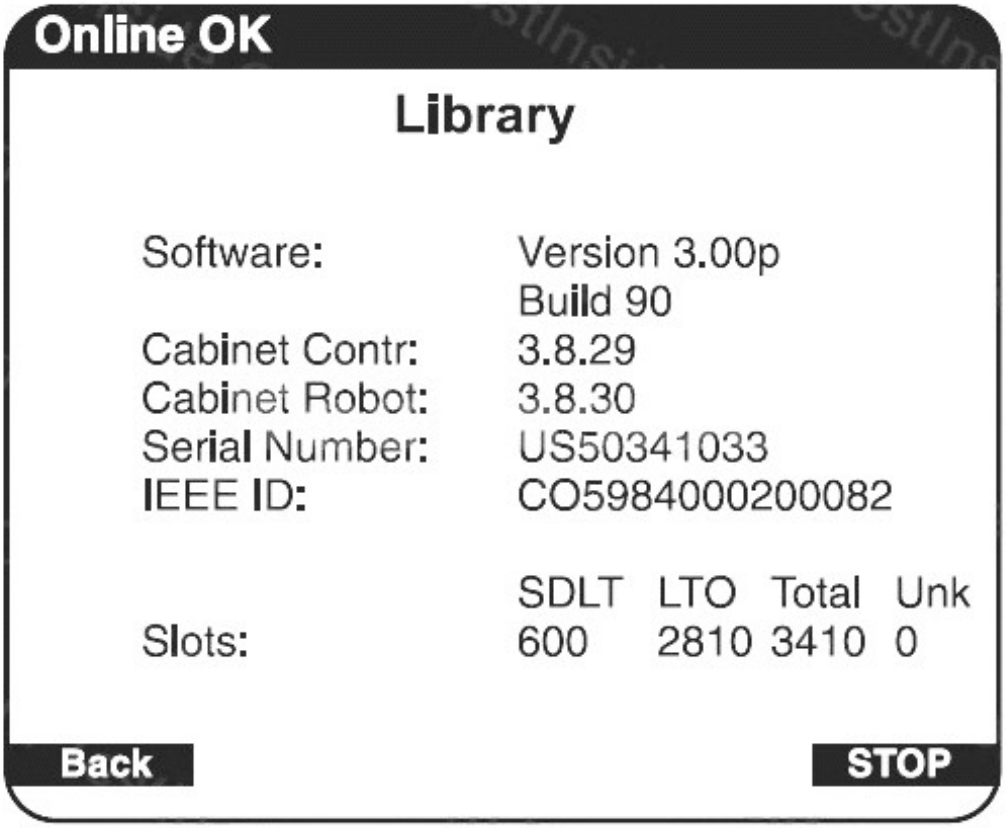

Which ESL E-Series tape library configuration is shown in the Operator Control Panel Library screen?

A.last cabinet

B.primary cabinet

C.secondary cabinet

D.stand-alone cabinet

Answer: B

20. What are the standard cabling requirements for the Interface Manager card of an EML E-Series tape library?

A.4 x Ethernet to interface controllers, 1 x Ethernet to robotics controller, 1 x Ethernet to LAN

B.4 x Ethernet to interface controllers, 1 x Fibre Channel to robotics controller, 1 x Ethernet to LAN

C.4 x Fibre Channel to interface controllers, 1 x Ethernet to robotics controller, 1 x Ethernet to LAN

D.4 x Fibre Channel to interface controllers, 1 x Fibre Channel to robotics controller, 1 x Ethernet to LAN

Answer: A

21. When is Lock Element Addressing used in the ESL E-Series library?

A.with multiple tape drive clusters

B.as an electronic lock of the access doors

C.when multiple Interface Controllers are used

D.for cross-linked libraries with three or more cabinets

Answer: D

22. With which management specification does the Command View TL Provider comply?

A.Direct Management Initiative (DMI)

B.Advanced Remote Management (ARM)

C.Simple Network Management Protocol (SNMP)

D.Storage Management Initiative Specification (SMI-S)

Answer: D

23. What is important to remember when changing from Manual to Automatic mode of the Interface Manager of an ESL E-Series tape library?

A.All drives must be taken offline.

B.Fibre Channel cables must be unplugged.

C.Interface Controllers must be powered off first.

D.Any customizations created in Manual mode will be lost.

Answer: D

24. What can be connected using the vacant Ethernet port on the right side of the cabinet controller in an ESL E-Series tape library?

A.an external LAN

B.cluster controllers

C.interface management card

D.Fibre Channel interface controllers

Answer: A

25. For which connection, other than the cabinet controller, is the I2C network cable used in ESL E-Series

tape libraries?

A.external LANs

B.cluster controllers

C.interface management cards

D.Fibre Channel interface controllers

Answer: B

26. How often is the CommandView TL Health Summary screen updated?

A.every 30 seconds

B.at 15-minute intervals

C.whenever the library status changes

D.configurable to any value up to 900 seconds

Answer: C

27. Which scheme is used in the Command Line Interface for drive and slot numbers in ESL E-Series tape libraries?

A.0 based

B.1 based

C.2 based

D.Hex based

Answer: B

28. How many cartridge slots can be used in an 8U drive expansion module mounted at the bottom of an EML E-Series library?

A.48

B.87

C.94

D.103

Answer: B

29. What is the maximum cartridge slot count in an EML E-Series library?

A.325

B.470

C.505

D.595

Answer: C

30. Which statement about an EML E-Series library is correct?

A.It allows serverless backup with only a few configuration steps if a Secure Manager license is installed.

B.The initial configuration can be done over the front panel, Command View TL or the serial port on the robotics controller using CLI.

C.It is fully compliant with the Storage Management Initiative Specifications (SMI-S) and can be configured with HP Storage Essentials.

D.It bridges the capabilities and features between the business-class HP StorageWorks MSL Series and enterprise-class ESL E-Series tape libraries.

Answer: D