IT-DUMPS Q&A

Accurate study guides, High passing rate!
IT-dumps provides update free of charge in one year!

http://www.it-dumps.com

Exam : **70-227**

Title : Installing, Configuring, and Administering Microsoft Internet Security and Acceleration (ISA) Server

Version : Demo

1. You are the administrator of your company network. You install Windows 2000 Server and ISA Server on a computer named ISA1.

Your network includes an internal FTP server named IIS-server1. Internal users regularly upload files and directories to this server. A remote user named Lillianne needs to connect to isa1.millertextiles.com, which maps to the external IP address of ISA1. However, Lillianne cannot make the connection to IIS-server1.

You need to reconfigure your network so that remote users can upload files to isa1.millertextiles.com. You also need to maintain network security. What should you do?

A. Add a custom packet filter for the FTP protocol. Configure it to use port 21.

B. Add an application filter for each FTP port in use on IIS-server1.

C. Create a new protocol rule to allow the FTP protocol on ISA1.

D. Create a server publishing rule for IIS-server1.

Answer: D

2. You are the administrator of your company's network. The company uses ISA Server to publish a Web site to the Internet.A separate Web server located behind the ISA Server computer hosts the Web site. The Web site requires the use of an SSL secure channel. The same server certificate is used on the ISA Server computer and on the Web server.Currently, the ISA Server computer uses SSL bridging to publish the Web site. This is the only Web site that is published on the ISA Server computer.

You want to publish the Web site by using an SSL tunnel through the ISA Server computer instead of by using SSL bridging.

Which two actions should you take? (Each correct answer presents part of the solution. Choose two.)

A. Disable the SSL listener for incoming Web requests.

B. Remove the server certificate from the ISA Server computer.

C. Create a new Web publishing rule for the Web server. Configure the rule to redirect incoming SSL requests as SSL requests to the internal Web server.

D. Create a new Web publishing rule for the Web server. Configure the rule to require the use of an SSL secure channel.

E. Create a new server publishing rule that applies to the HTTPS server protocol. Publish the internal IP address of the Web server.

F. Create a new routing rule for the Web server destination. Configure the rule to redirect SSL requests as SSL requests to the Web site.

Answer: AE

3. You are the administrator of your company network. You install and configure ISA Server on a computer named ISA-server1. An employee named Michael, who works offsite, frequently needs to transfer highly confidential files to the company network. His computer runs Microsoft Windows 2000 Professional.

You need to provide Michael with VPN access to your network. What should you do?

A. Enable a PPTP tunnel to pass through ISA-server1.

Configure static packet filters for PPTP call and PPTP receive.

B. Enable IP routing. Configure static packet filters for L2TP.

C. On ISA-server1, run the Remote ISA VPN Wizard. Create a VPN connection on Michael's computer

.D. On ISA-server1, run the ISA VPN Server Wizard. Create a VPN connection on Michael's computer.

Answer: D

4. Executives in your company require dedicated network bandwidth for video conferencing. On your ISA Server computer, you set bandwidth priorities for each user group, as shown in this table:Q V

Users	75
Managers	100
Executives	200
Administrators	200

You create the bandwidth rules shown in the exhibit. (Click the Exhibit button.)

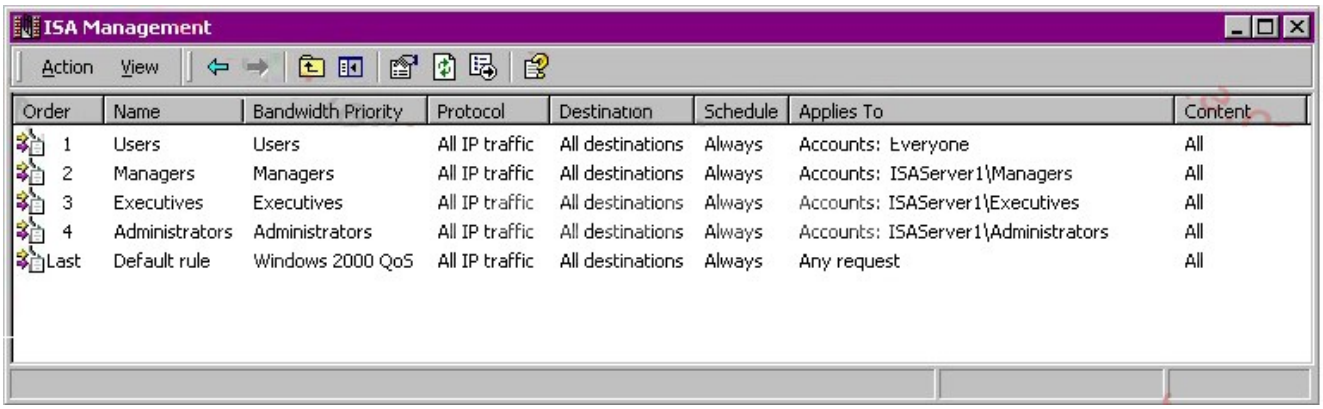

Order	Name	Bandwidth Priority	Protocol	Destination	Schedule	Applies To	Content
1	Users	Users	All IP traffic	All destinations	Always	Accounts: Everyone	All
2	Managers	Managers	All IP traffic	All destinations	Always	Accounts: ISAServer1\Managers	All
3	Executives	Executives	All IP traffic	All destinations	Always	Accounts: ISAServer1\Executives	All
4	Administrators	Administrators	All IP traffic	All destinations	Always	Accounts: ISAServer1\Administrators	All
Last	Default rule	Windows 2000 QoS	All IP traffic	All destinations	Always	Any request	All

Later, executives report that a video conference was interrupted by repeated pauses and dropped frames. On investigation, you discover that the amount of bandwidth allocated to the Users group is the same as the amount allocated to the Executives group. You need to ensure that the proposed bandwidth priorities are preserved, even during times of high network usage. What should you do?

A. Remove the Users bandwidth rule.

B. Remove the Executives bandwidth rule.

C. Reorder the bandwidth rules so that the Users rule is listed last.

D. Reorder the bandwidth rules so that the Executives rule is listed last.

E. Reorder the bandwidth rules so that the Users rule is listed below the Executives rule.

Answer: E

5. You are the network administrator for your company. Your network includes Microsoft Windows 2000 Server computers and Windows 95 client computers. You want to allow remote users to access applications stored on an internal Windows 2000 Server computer, which runs Terminal Services in application mode. You configure packet filters on your ISA Server computer to allow the Terminal Services clients to access the Terminal server. However, remote users report that they cannot access either the Terminal server or their applications. You need to enable remote users to access their applications. What should you do?

A. Install the Firewall Client software on the remote computers.

B. Install the Terminal Services Client software on the ISA Server computer.

C. Configure a PPTP VPN connection for the remote computers on the ISA Server computer.

D. Configure an L2TP VPN connection for the remote computers on the ISA Server computer.

Answer: C

6. You are the administrator of an ISA Server array. The relevant portion of your internal network is configured as shown in the exhibit. (Click the Exhibit button.)

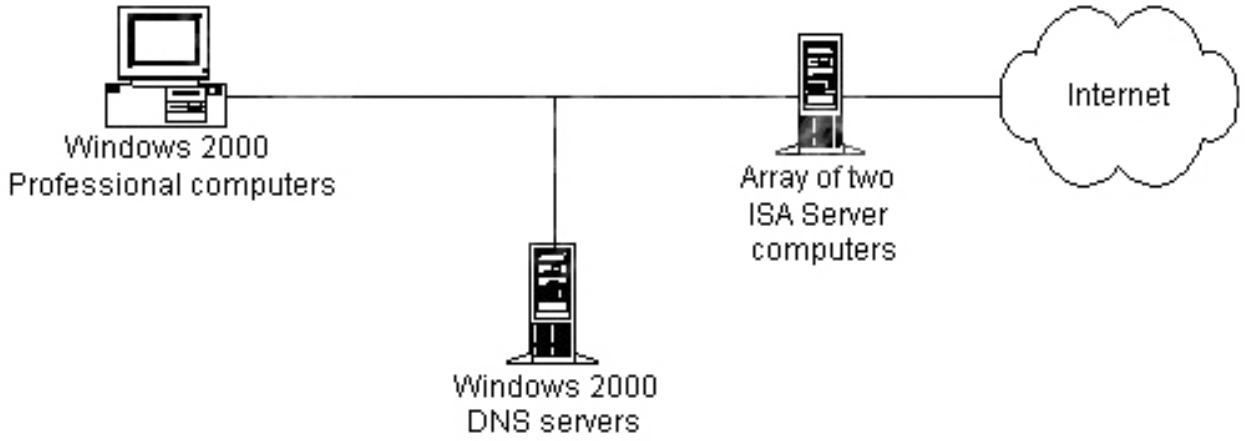

The network consists of one Microsoft Windows 2000 forest with three domains. The DNS zones for the three domains are hosted on the DNS servers.On all client computers, the Firewall Client software is installed and Microsoft Internet Explorer is configured to use the members of the ISA Server array as proxy servers. You configure all client computers to use the DNS addresses of the internal DNS servers.When you use Network Monitor to verify your configuration, you discover that the DNS names for the internal network are being resolved by the ISA Server array.

You need to ensure that all DNS name requests for the internal network are sent to the internal DNS servers. This condition includes DNS names used by Internet Explorer and by the Firewall Client software. Which two actions should you take? (Each correct answer presents part of the solution. Choose two.)

A. Configure Internet Explorer on the client computers with a list of addresses that should not use a proxy server. Include the three domain names.

B. Edit the msplat.txt file on the client computers to include the three domain names.

C. Configure outgoing Web requests to resolve Web requests within the array before routing.

D. Create a new routing rule that applies to all computers in the three domains. Forward Web requests to the internal DNS servers.

E. Configure the local domain table to include the three domain names.

Answer: AE

7. You administer a single ISA Server computer. Your internal network consists of 10 domains in one Microsoft Windows 2000 forest. The relevant portion of your network configuration is shown in the exhibit. (Click the Exhibit button.)

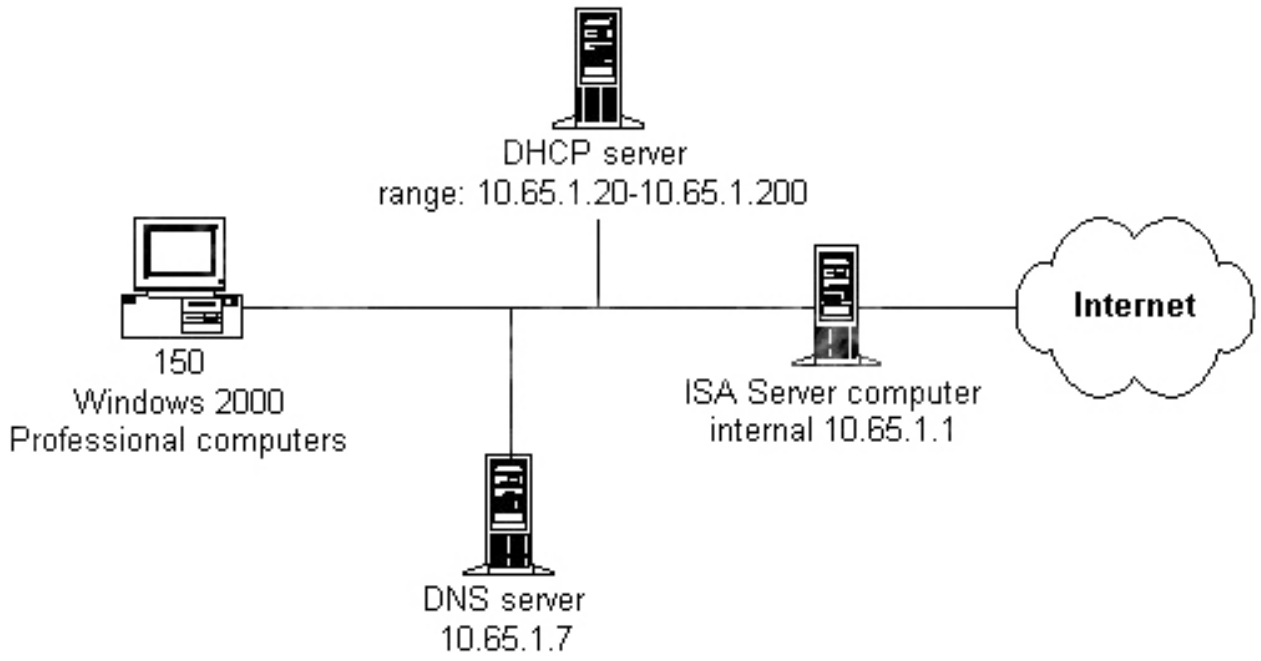

The network uses a root DNS server with the IP address 10.65.1.7 to host the DNS zones for the Windows 2000 domains. The ISA Server computer uses the DNS server of your ISP for name resolution. You want to configure the Web browser on the client computers so that internal and external DNS names are resolved correctly. Company policy specifies that you cannot install the Firewall Client software. Which two actions should you take? (Each correct answer presents part of the solution. Choose two.)

A. Configure DHCP to assign 10.65.1.1 as the DNS address for the client computers.

B. Configure DHCP to assign 10.65.1.7 as the DNS address for the client computers.

C. Configure the Web browser on the client computers to use a proxy server.

Specify 10.65.1.1 as the proxy address and use the ISA Server HTTP Listener port.

D. Configure the Web browser on the client computers to use a proxy server.

Specify 10.65.1.7 as the proxy address and use port 53 on the DNS server.

E. Configure the network adapter of your DNS server to use 10.65.1.1 as the DNS address.

F. Configure the client computers as secure network address translation (SecureNAT) clients.

Specify 10.65.1.7 as the default gateway.

Answer: BC

8. You are setting up an ISA Server computer named ISA1. This server will provide Internet access for users on your company network. The relevant portion of your network configuration is shown in the exhibit. (Click the Exhibit button.)

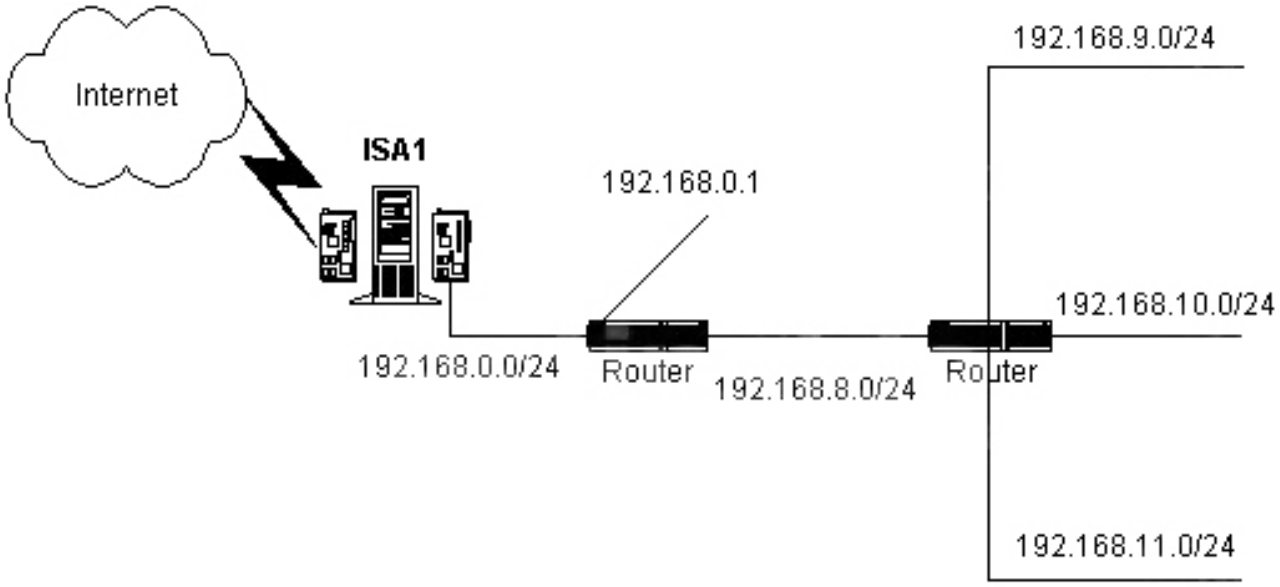

You have already installed Microsoft Windows 2000 Server and configured ISA1 for Internet access. You are now configuring the internal network adapter. You will be using an IP address of 192.168.0.2/24. You need to finish configuring ISA1 so that it can transmit packets to all computers on your network. What should you do?

A. In the TCP/IP properties for the internal network adapter, specify a default gateway with the address 192.168.0.1.

B. In the TCP/IP properties for the external network adapter, add an additional default gateway with the address 192.168.0.1.

C. From a command prompt, issue this command:

route -f add 0.0.0.0 mask 255.255.255.0 192.168.0.1

D. From a command prompt, issue this command: route -f

add 0.0.0.0 mask 255.255.252.0 192.168.0.1

E. From a command prompt, issue this command:

route -p add 192.168.9.0 mask 255.255.255.0 192.168.0.1

F. From a command prompt, issue this command:

route -p add 192.168.8.0 mask 255.255.252.0 192.168.0.1

Answer: F

9. You are the network administrator for your company. You purchase a new computer, which you plan to use as the ISA Server computer on your network. You want this computer to provide SMTP content filtering for your existing e-mail server. In addition, you want this computer to replace your current Web server. You install Microsoft Windows 2000 Server with default settings on the new computer. Now you need to prepare this computer to fulfill your requirements. Which two actions should you take? (Each correct answer presents part of the solution. Choose two.)

A. Uninstall the SMTP component of the new computer.

B. Uninstall the NNTP component of the new computer.

C. Configure the TCP port used by the Web server component of the new computer to use a port that is not currently used.

D. Configure a new SMTP remote domain to handle mail delivery for the DNS domain of your company.

E. Assign the IP address of the new computer's default Web site to the internal IP address of the new computer.

F. Assign the IP address of the SMTP server to the internal IP address of the new computer.

Answer: CE

10. You are the administrator of your company network. You install ISA Server with default settings on a network computer. You configure this computer with the appropriate site and content rules and protocol rules to enable Internet access. You also configure it with Routing and Remote Access. Users on the network now report that Internet access is slow. You create a report job on your ISA Server computer, which generates the report shown in the exhibit. (Click the Exhibit button.)

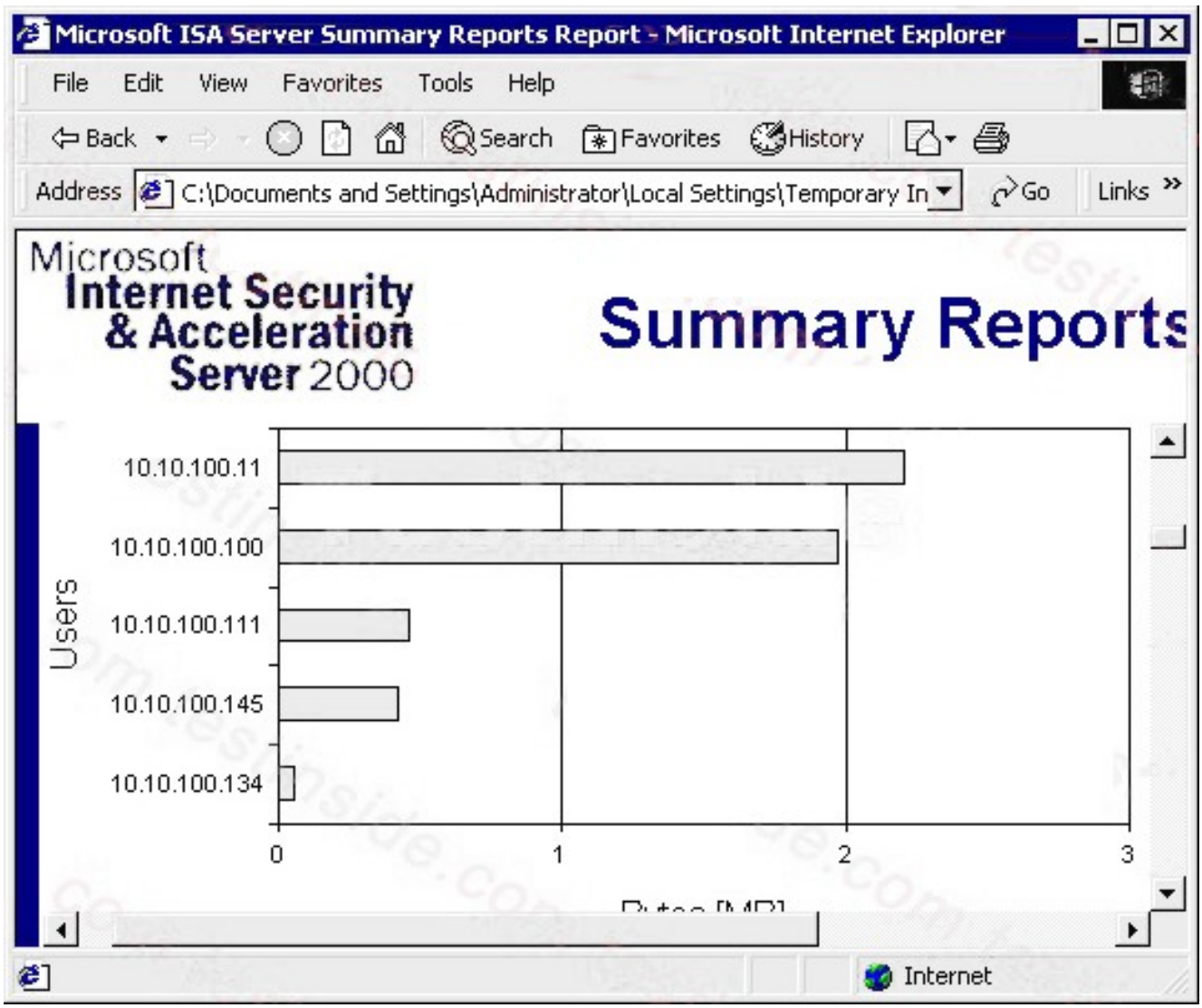

You need to configure the ISA Server computer to optimize traffic across your T1 WAN link. What should you do?

A. Create a new bandwidth rule for HTTP traffic.

Apply the new rule to the client address set that maps to the 10.10.100.134 and 10.10.100.145 IP addresses.

Create a bandwidth priority. Enter the number 25 for both inbound and outbound bandwidth.

B. Create a new bandwidth rule for HTTP traffic.

Apply the new rule to the client address set that maps to the 10.10.100.134 and 10.10.100.145 IP addresses.

Create a bandwidth priority. Enter the number 50 for both inbound and outbound bandwidth.

C. Create a client address set for IP addresses 10.10.100.0/24.

Create a new bandwidth rule. Add the client address set to the new bandwidth rule.

Create a bandwidth priority. Enter the number 50 for both inbound and outbound bandwidth.

D. Create a destination set for IP addresses 10.10.100.11 and 10.10.100.100.

Create a new bandwidth rule. Add the destination set to the new bandwidth rule.

Create a bandwidth priority. Enter the number 25 for both inbound and outbound bandwidth.

Answer: D

11. You are preparing an existing Microsoft Windows 2000 Server computer to use as an ISA Server computer.

This computer will protect your internal network. It currently provides a dial-on-demand VPN connection to a remote office.

It also provides network address translation. This computer will continue to provide all its current functionality after it is configured as an ISA Server computer. You want to pre-configure and install ISA Server with the least possible administrative effort. Which two actions should you take? (Each correct answer presents part of the solution. Choose two.)

A. In the Routing and Remote Access console, delete the external interface used for the Network Address Translation (NAT) protocol.

B. In the Routing and Remote Access console, delete the Network Address Translation (NAT) protocol object.

C. In the Routing and Remote Access console, enable packet filtering.

D. In the ISA Server console, manually create packet filters for the VPN.

E. In the ISA Server console, enable IP routing.

Answer: BD

12. You are the network administrator for your company. You are preparing to install ISA Server on a Microsoft Windows 2000 computer named ISA1. This computer will become a Web Proxy server for your network. The relevant portion of your network is configured as shown in the exhibit named "Network Configuration." (Click the Exhibit button.)

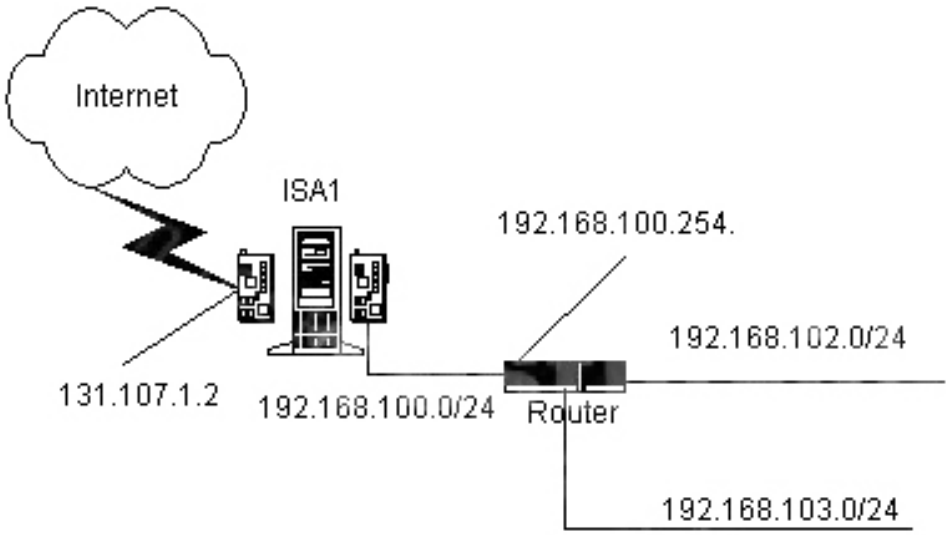

To ensure that ISA1 is configured properly for the installation of ISA Server, you view the routing table of ISA1, which is shown in the exhibit named "Routing Table." (Click the Exhibit button.)

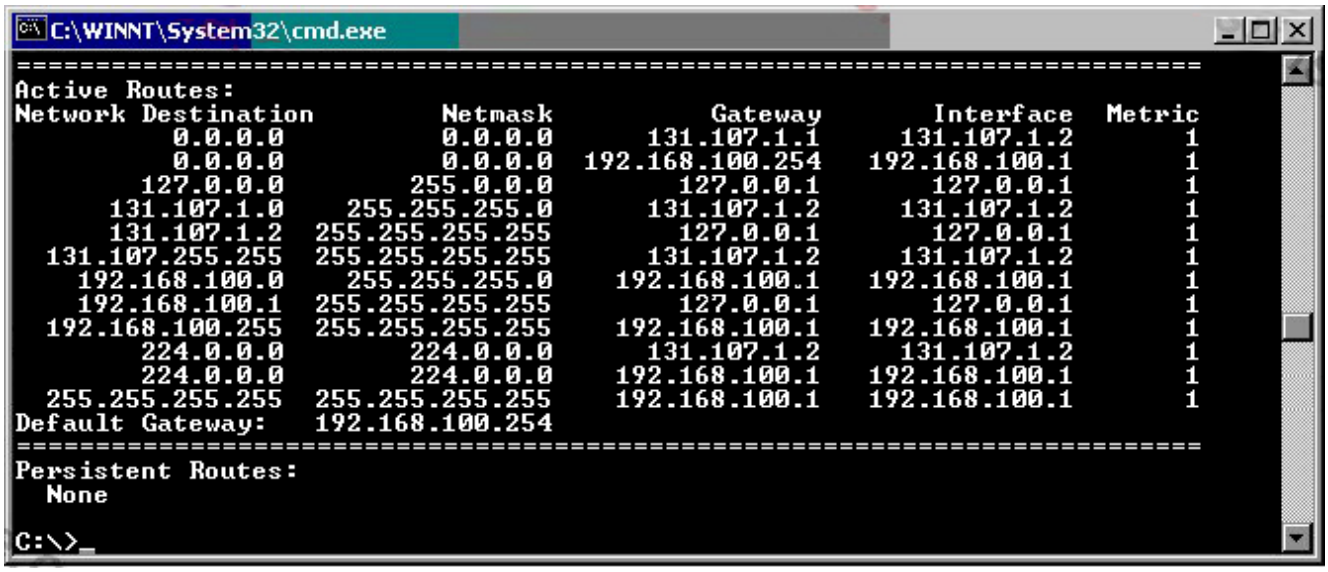

```
C:\WINNT\System32\cmd.exe
===========================================================================
Active Routes:
Network Destination        Netmask          Gateway       Interface  Metric
          0.0.0.0          0.0.0.0      131.107.1.1     131.107.1.2       1
          0.0.0.0          0.0.0.0  192.168.100.254   192.168.100.1       1
        127.0.0.0        255.0.0.0        127.0.0.1       127.0.0.1       1
      131.107.1.0    255.255.255.0      131.107.1.2     131.107.1.2       1
      131.107.1.2  255.255.255.255        127.0.0.1       127.0.0.1       1
  131.107.255.255  255.255.255.255      131.107.1.2     131.107.1.2       1
    192.168.100.0    255.255.255.0    192.168.100.1   192.168.100.1       1
    192.168.100.1  255.255.255.255        127.0.0.1       127.0.0.1       1
  192.168.100.255  255.255.255.255    192.168.100.1   192.168.100.1       1
        224.0.0.0        224.0.0.0      131.107.1.2     131.107.1.2       1
        224.0.0.0        224.0.0.0    192.168.100.1   192.168.100.1       1
  255.255.255.255  255.255.255.255    192.168.100.1   192.168.100.1       1
Default Gateway:   192.168.100.254
===========================================================================
Persistent Routes:
  None

C:\>_
```

Now you need to configure the routing table so that it can transmit packets to all computers on your network, and to computers on the Internet. Which two actions should you take? (Each correct answer presents part of the solution. Choose two.)

A. From a command prompt, issue this command: route delete 0.0.0.0 mask 0.0.0.0 131.107.1.1

B. From a command prompt, issue this command:

route delete 192.168.100.0 mask 255.255.255.0 192.168.100.1

C. In the TCP/IP properties for the internal network adapter, remove the entry for the default gateway.

D. In the TCP/IP properties for the external network adapter, remove the entry for the default gateway.

E. From a command prompt, issue this command:

route -p add 192.168.100.0 mask 255.255.0.0 192.168.100.254

F. From a command prompt, issue this command:

route -p add 192.168.102.0 mask 255.255.254.0 192.168.100.254

Answer: CF

13. You are preparing a Microsoft Windows 2000 Server computer for the installation of ISA Server. You install two network adapters on this computer. One network adapter is connected to the Internet and the other is connected to your internal network. When you issue a command to check the open ports on both network adapters, you receive the output shown in the exhibit. (Click the Exhibit button.)

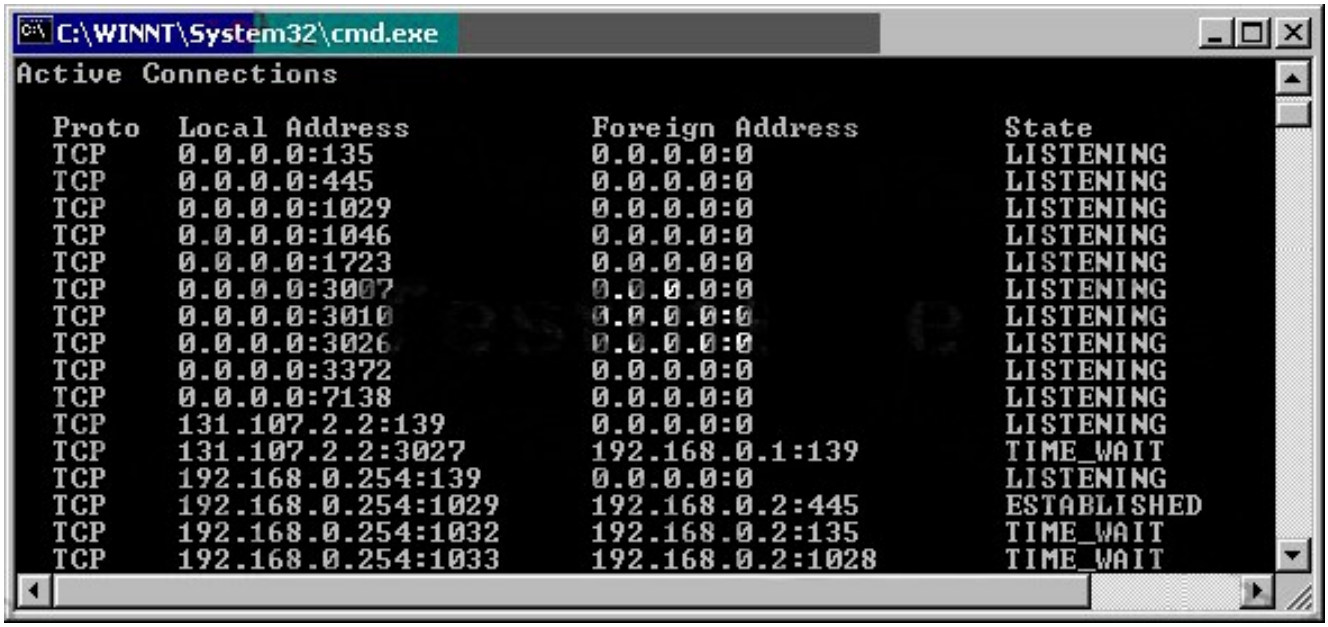

Before you install ISA Server, you want to configure this computer so that unauthorized external client computers cannot discover that it is capable of sharing resources. You must also maintain the highest possible level of security. What should you do?

A. On the network adapter configured with the IP address 192.168.0.254, disable NetBIOS over TCP/IP.

B. On the network adapter configured with the IP address 131.107.2.2, disable NetBIOS over TCP/IP.

C. On the network adapter configured with the IP address 192.168.0.254, disable File and Printer Sharing for Microsoft Networks .

D. On the network adapter configured with the IP address 131.107.2.2, disable File and Printer Sharing for Microsoft Networks .

Answer: B

14. You are the administrator of your company's network. The network contains Microsoft Windows 2000 Professional client computers and Windows 2000 Server computers.

You want to install ISA Server on a Windows 2000 Server computer named ServerA.

ServerA contains one network adapter that is connected to the internal network and another network adapter that is connected to the Internet.

The configuration of the relevant portion of the network is shown in the exhibit. (Click the Exhibit button.)

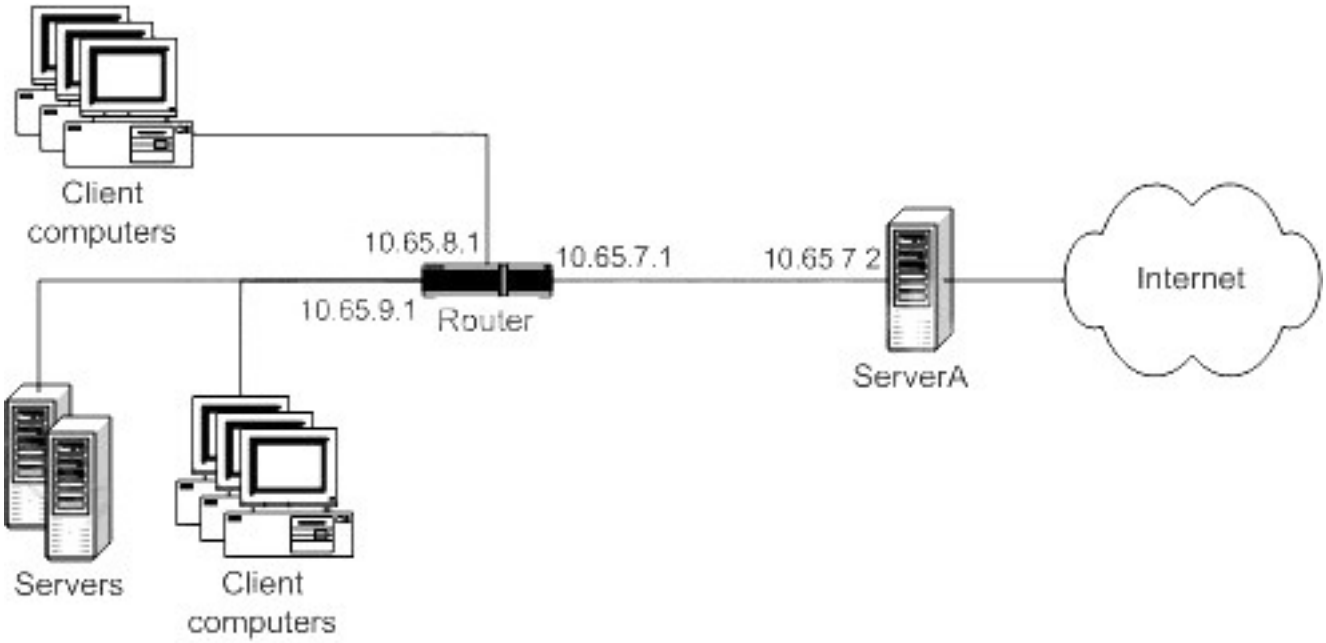

You verify that you can create a connection from ServerA to a server on the Internet. Before you install ISA Server,

you want to configure ServerA so that client computers can connect to the Internet.What should you do?

A. Configure the default gateway of the external network adapter on ServerA to the IP address of the internal network adapter.

B. Configure the default gateway of the internal network adapter on ServerA to the IP address of the external network adapter.

C. Configure the default gateway of the internal network adapter on ServerA to the 10.65.7.1 IP address of the router.

D. Create a static route for the subnet of your ISP.

E. Create static routes for all the subnets on the internal network.

Answer: E

15. You are the administrator of your company's network. The network consists of a single domain that contains all the Microsoft Windows 2000 Professional client computers and all the Windows 2000 Server computers on the network.One of the Windows 2000 Server computers is named ServerB and is a DNS server. All computers on the network are configured to use ServerB as their DNS server. The DNS server on ServerB is configured to use the DNS server of your ISP as a forwarder.You want to install ISA Server on a Windows 2000 Server computer named ServerA. ServerA contains one network adapter that is connected to the internal network and another network adapter that is connected to the Internet. You

configure each network adapter so that it has a static IP address. ServerA is configured to use ServerB as its DNS server.

You plan to install the Firewall Client software on all Windows 2000 Professional client computers.

The configuration of the relevant portion of the network is shown in the exhibit. (Click the Exhibit button.)

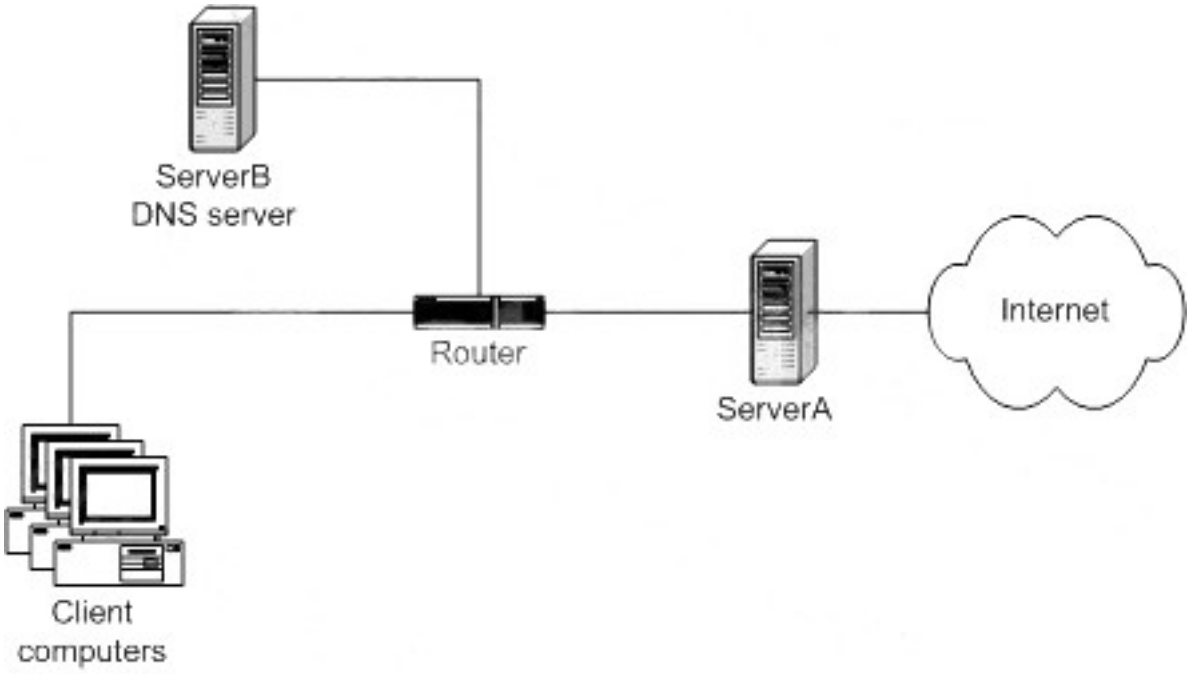

Before you install ISA Server, you want to configure the TCP/IP settings of ServerA so that client computers can connect to the Internet. What should you do?

A. Configure the TCP/IP settings of the internal network adapter to use the connection's DNS suffix in DNS registration.

B. Configure the TCP/IP settings of the internal network adapter so that parent suffixes of the primary DNS suffix are not appended.

C. Configure the TCP/IP settings of the external network adapter to have an interface metric of 2.

D. Configure the TCP/IP settings of the external network adapter so that the connection's addresses are not registered in DNS.

E. Configure the TCP/IP settings of the external network adapter to use the DNS suffix of the Windows 2000 domain name.

Answer: D

16. You are the administrator of your company's network.

The network contains Microsoft Windows 2000 Professional client computers and Windows 2000 Server computers.

You want to install ISA Server on a Windows 2000 Server computer named ServerA.

ServerA contains one network adapter that is connected to the internal network and another network

adapter that is connected to the Internet.

You configure each network adapter so that it has a static IP address.

The configuration of the network adapters is shown in this table:

ServerA	IP Address	Subnet Mask	Default Gateway
Internal network adapter	10.65.7.2	255.255.255.0	10.65.7.1
External network adapter	23.1.8.6	255.255.255.240	23.1.8.1

The configuration of the relevant portion of the network is shown in the exhibit. (Click the Exhibit button.)

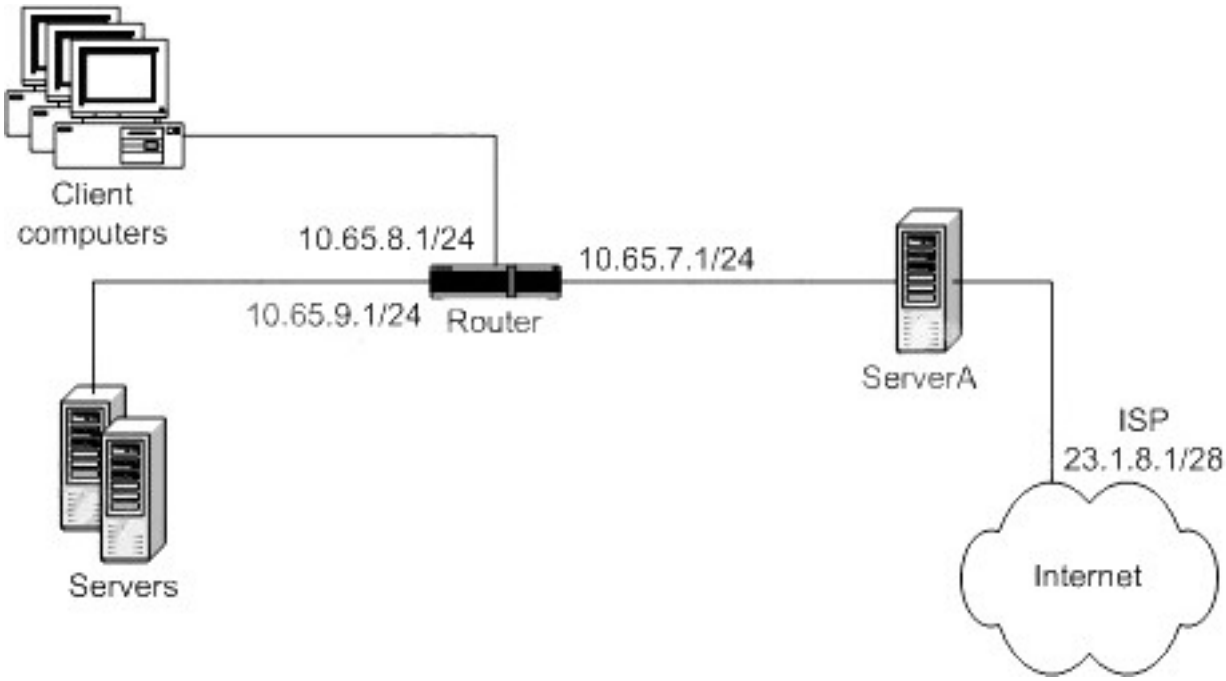

You want to configure the TCP/IP settings of the appropriate network adapter on ServerA so that client computers can connect to the Internet after you install ISA Server. What should you do?

A. On the internal network adapter, remove the default gateway setting.

B. On the internal network adapter, change the subnet mask to 255.255.0.0.

C. On the external network adapter, remove the default gateway setting.

D. On the external network adapter, change the default gateway to 23.1.8.6.

E. On the external network adapter, change the subnet mask to 255.255.255.0.

Answer: A

17. You are the administrator of your company's network. The network contains Microsoft Windows 2000 Professional client computers and Windows 2000 Server computers. One of the Windows 2000 Server

computers is named ServerA.

ServerA is not in a Windows 2000 domain. ServerA contains one network adapter that is connected to the internal network and another network adapter that is connected to the Internet. You plan to install ISA Server on ServerA. A Windows 2000 Server computer named ServerB is the DNS server for the network.Another administrator configured the DNS settings for the network. All client computers on the network are configured to use ServerB as their DNS server. ServerB uses ServerA as a forwarder.

ServerA is configured to use your ISP's DNS server.The relevant DNS settings are shown in the exhibit. (Click the Exhibit button.)

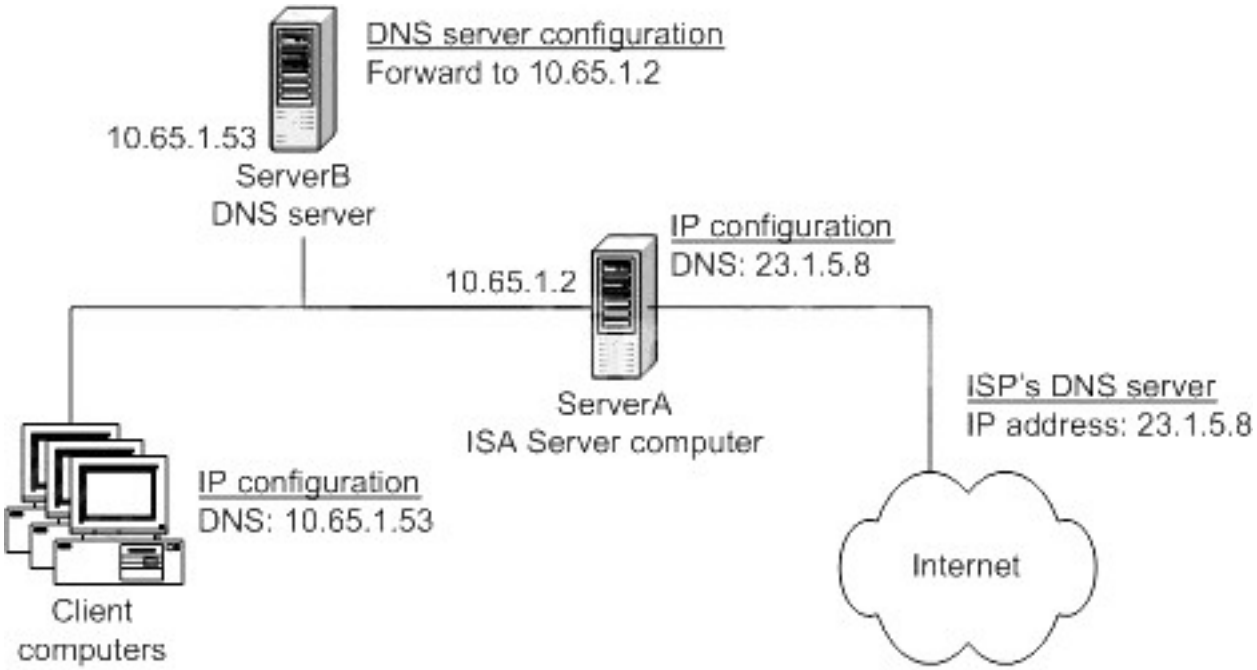

You install ISA Server on ServerA and define the rules to grant Internet access to all computers. The client computers are SecureNAT clients of the ISA Server computer.

You want client computers to be able to resolve both internal and external DNS names. What should you do?

A. Change the IP configuration on the client computers.

Use the IP address of the ISA Server computer, 10.65.1.2, as a DNS server.

B. Change the DNS server configuration on ServerB.

Use the IP address of your ISP's DNS server, 23.1.5.8, as a forwarder.

C. Change the IP configuration on the ISA Server computer.

Use the IP address of ServerB, 10.65.1.53, as a DNS server.

D. Change the IP configuration on the ISA Server computer.

Remove the setting for a DNS server on both network adapters.

Answer: B

18. You are configuring a computer named ISA1.

You will use this computer as the ISA Server computer for your company intranet.

You set up ISA1 so that it is connected to three different physical networks.

The resulting configuration is shown in the exhibit. (Click the Exhibit button.)

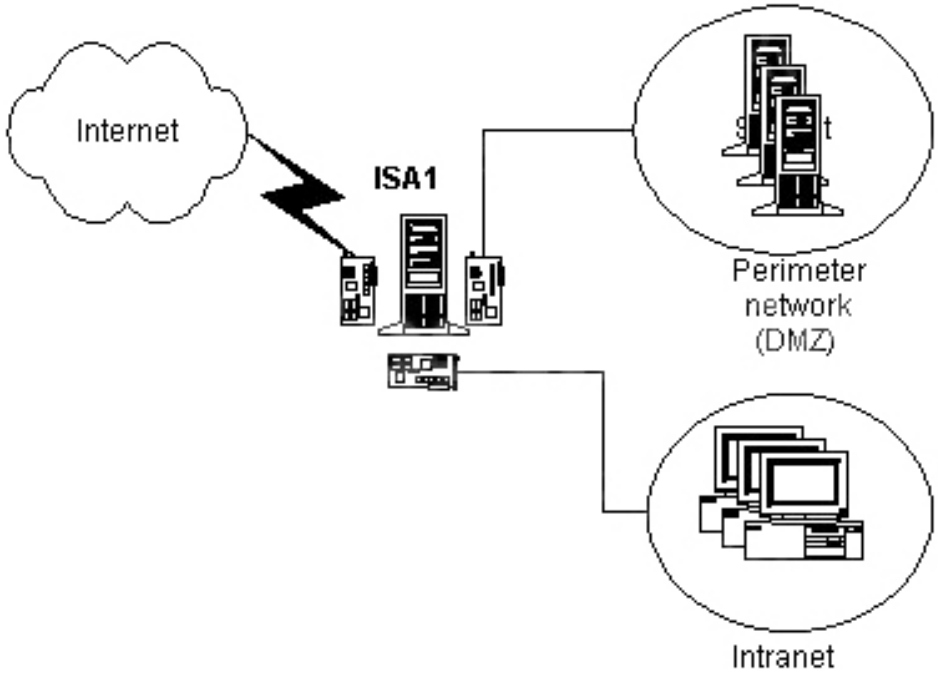

You also plan to add a Web server and an FTP server to the perimeter network (also known as the DMZ). Users on the Internet should be able to access the servers in the DMZ by using FTP and HTTP. Client computers on the company intranet should be able to connect to file shares on the servers in the DMZ.

You need to configure ISA1 to support this functionality. Which two actions should you take? (Each correct answer presents part of the solution. Choose two.)

A. On ISA1, enable Routing and Remote Access and enable the computer as a router.

B. In the Properties page for the IP packet filters of ISA1, enable IP routing and packet filtering.

C. In the local address table of ISA1, include the address for the network adapter that is connected to the DMZ.

D. In the local address table of ISA1, exclude the address for the network adapter that is connected to the company intranet.

E. In the local address table of ISA1, exclude the address range for the DMZ.

Answer: BE

19. You are the network administrator of a branch office for your company. The branch office and the main office are connected by a dedicated fractional T1 line. The main office includes an array of ISA Server computers. You use group policies and DHCP to administer the configuration of all client computers,

which run Microsoft Windows 2000 Professional. You need to install ISA Server at the branch office to improve the performance of FTP and HTTP requests from your client computers. Your configuration must take advantage of the cache on the ISA Server array in the main office. What should you do?

A. Install ISA Server in integrated mode. Use DHCP to configure the client computers at the branch office with the internal IP address of your ISA Server computer as the default gateway.

B. Install ISA Server in cache mode. Use DHCP to configure the client computers at the branch office with the internal IP address of your ISA Server computer as the default gateway.

C. Install ISA Server in integrated mode. Use DHCP to provide the location of the WPAD.DAT file to the client computers at the branch office.

D. Install ISA Server in cache mode. Use DHCP to provide the location of the WPAD.DAT file to the client computers at the branch office.

Answer: D

20. You are the administrator of your company's network. The network consists of a single Microsoft Windows 2000 domain. The company has a main office in New York and a large branch office in Atlanta. Each office is its own Active Directory site. The Atlanta office is connected to the New York office by means of a dedicated T1 line.

The New York office contains an ISA Server array named HQArray. Currently, all Internet access for both offices is routed through the New York office. The company wants to reduce Internet traffic across the WAN link. As part of this plan, the Atlanta office will maintain its own connection to the Internet. You want to install ISA Server on 20 Windows 2000 Server computers at the Atlanta office. Each ISA Server computer will function as a member server in the domain and will be a member of a new array named AtlantaArray. You want to perform unattended installations of the ISA Server computers at the Atlanta office.

You create an unattended setup file that contains the following code:

```
[ISA Setup Install]
Install Dir=c:\Program Files\Microsoft ISA Server
[Array Membership]
Join Existing Array=AtlantaArray
Create New Array And Join=AtlantaArray
[Features]
Installation Option=INTEGRATED
[Firewall LAT Config]
Range1=172.16.0.1
172.16.255.254
```

Range2=172.17.0.1 172.17.255.254

Range3=172.18.0.1 172.18.255.254

Range4=172.19.0.1 172.19.255.254

[Cache Config]

Drive1=D: 2048 8192

Enable Cache=1

You copy the unattended setup file to the root folder on drive C of the first member of AtlantaArray. You run Setup in unattended mode. Setup fails and the following error message is displayed:

"Cannot find array." Setup fails and the same error message is displayed when you attempt to complete an unattended installation of ISA Server on other servers in the Atlanta office.You need to successfully complete installation of the first ISA Server computer at the Atlanta office. What should you do?

A. Add the addresses of the domain's DNS server computers to the TCP/IP properties of each Atlanta ISA Server computer.

B. Copy the unattended setup file to the setup path of each ISA Server computer.

C. Remove the Join Existing Array=AtlantaArray
entry from the [Array Membership]
section of the unattended setup file.

D. Run msisaent.exe from the ISA Server CD-ROM.

Answer: C

21. You are the administrator of your company's network. The network consists of a single Microsoft Windows 2000 domain. The network is currently connected to the Internet by means of a Network Address Translation (NAT) router, as shown in the exhibit named "Network Diagram." (Click the Exhibit button.)

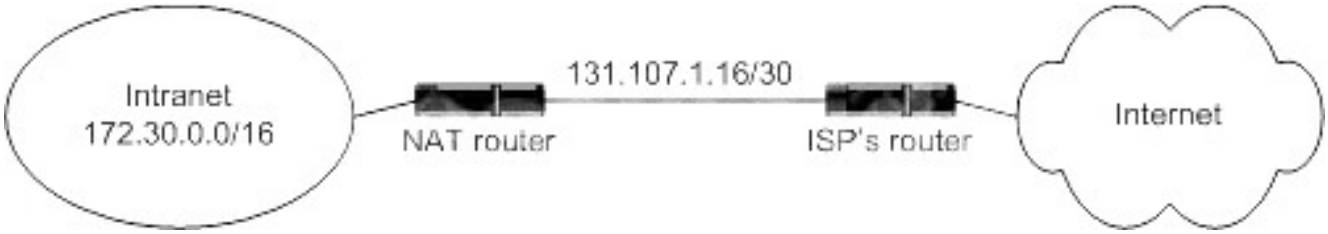

You replace the NAT router with an ISA Server computer that is configured as a member of an array named CorpArray. You complete installation of ISA Server and you receive no error messages. When you attempt to connect to the ISA Server computer by using ISA Management, you receive the following error message:

ISA Error The operation failed Failed to connect!

Error 0x8007203a Details:

The server is not operational.

When you check Event Viewer on the ISA Server computer, you discover that none of the ISA Server services have started. The ISA Server Control service generates the following event message:

Event Type:

Warning Event Source: Microsoft ISA Server Control

Event Category: None

Event ID: 13110

Date: 12/15/2001

Time: 13:21

User: N/A

Computer: ISA-Server1

Description: ISA Server snapin failed to retrieve the arrays list since connection to Global Catalog could not be established. It will next try to retrieve the arrays information from current domain. Check your Active Directory configuration, DNS settings and ensure that the 'Net Logon' service is started.

You install ISA Management on your Windows 2000 Professional computer and you can connect to CorpArray. You view the configuration as shown in the exhibit named "ISA Management." (Click the Exhibit button.)

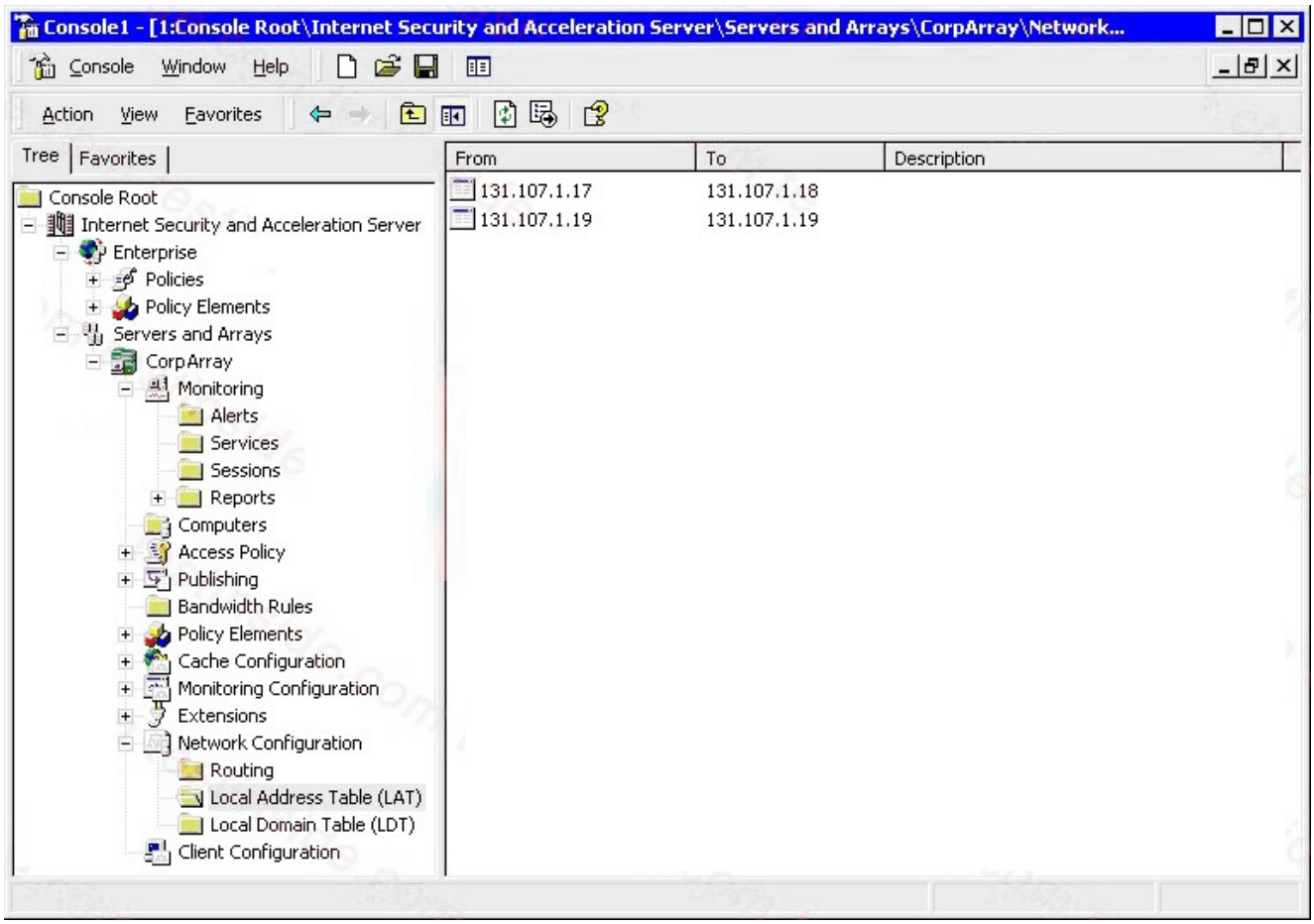

You need to configure CorpArray to allow the services to start. What should you do?

A. Delete all current entries in the local address table.

Manually add the address range 172.30.0.0-172.30.255.255.

B. Delete all current entries in the local address table.

Manually add the address range 131.107.1.0-131.107.1.255.

C. Add the addresses of the domain's DNS servers to the TCP/IP properties of the ISA Server computer.

D. Add the addresses of the domain's WINS servers to the TCP/IP properties of the ISA Server computer.

Answer: A

22. You are the administrator of your company's network. The network consists of a single Microsoft Windows 2000 domain. All server computers run Windows 2000 Server. The network contains 5,000 Windows 2000 Professional client computers. You are installing ISA Server on a Windows 2000 Server computer. Before the installation, the computer's hard disks are configured as shown in this table:

Physical Disk	Drive Letter	Usage	Total Size (MB)	Used Space (MB)	Free Space (MB)
0	C	System and boot	2,048	1,878	170
1	D	Paging file	18,432	512	17,920

You install ISA Server in integrated mode by using default settings and options. The installation of ISA Server finishes successfully. You install the Firewall Client software on all client computers. You also configure the client computers as Web Proxy clients. Later, users report that Web response is unacceptably slow. You discover that only a very small percentage of content is being served to requesting clients from the cache. When you attempt to adjust the size of the cache, you discover that there is no more space available on drive C.

Drive D is not listed as an option for creating a new cache directory.

You need to increase the size of the ISA Server cache. What should you do?

A. Convert drive D to NTFS. Delete the cache on drive C. Create a new cache that uses 3 GB of space on drive D.

B. Convert drive D to NTFS. Increase the size of the paging file on drive D.

C. Delete drive D and extend drive C to include the unused spac

E. Create a new cache that uses 3 GB of space on drive C.

D. Delete drive D and convert disk 1 to a dynamic disk. Re-create drive D and move the Urlcache folder from drive C to drive D.

Answer: A

23. You recently upgraded your Microsoft Proxy Server 2.0 computer to ISA Server. Before the upgrade, users on your internal network were able to access any Web site on the Internet. Now, users report that they can no longer browse the Internet. You must enable users to browse Web sites on the Internet. What should you do?

A. Configure a site and content rule to allow the users to access external Web sites.

B. Configure a protocol rule to allow outbound HTTP traffic.

C. Configure the client Web browsers to send CERN-compliant requests to TCP port 1080.

D. Configure ISA Server to listen for outbound Web requests on TCP port 80.

Answer: D

24. You are the administrator of your company network, which includes a main office and a branch office. The branch office connects to the Internet through a Microsoft Proxy Server 2.0 computer named Prx2. Prx2 is chained to another Proxy Server 2.0 computer named Prx1, which is located in the main office. You upgrade Prx1 to ISA Server. Now, users in both offices report that they cannot browse the Internet. You need to enable users in both offices to browse the Internet. Your solution must involve the least possible administrative effort. What should you do?

A. Configure your internal DNS server with a host record that points to a WSPAD.DAT file.

B. Configure your DHCP server to inform client computers of the location of a WPAD.DAT file.

C. Configure Prx1 to listen for outbound Web requests on TCP port 80.

D. Configure Prx1 to provide an automatic configuration script to Web browsers on your network.

Answer: C

25. You are the administrator of your company's Microsoft Windows 2000 network. For outbound Internet access, your company uses a Microsoft Proxy Server 2.0 array that consists of three servers running Windows NT Server 4.0.You need to upgrade your Proxy Server array to an ISA Server enterprise array in your Windows 2000 domain. You must perform the upgrade with the least possible administrative effort. You must also ensure that you can restore the current Proxy Server configuration, if necessary. What should you do?

A. On each server in the array, use the Proxy Server console to back up the Proxy Server configuration to a text file. Uninstall Proxy Server from each server. Upgrade the three servers to Windows 2000 and install ISA Server on each one.

B. On each server in the array, use the Proxy Server console to back up the Proxy Server configuration to a text file. Remove each server from the Proxy Server array. Upgrade the three servers to Windows 2000 and install ISA Server on each one.

C. On each server in the array, back up the MSP directory. Remove each server from the Proxy Server array. Install the Proxy Server Update Wizard and ISA Server on each server.

D. On each server in the array, back up the MSP directory. Remove each server from the Proxy Server array. Upgrade the three servers to Windows 2000 and install ISA Server on each one.

Answer: B

26. You are the administrator of your company network.

You recently upgraded your Microsoft Proxy Server 2.0 computer to ISA Server. Before the upgrade, the Proxy Server computer was your Web server.

It also published Web content on the Internet.

After the upgrade, you discover that the Web server component on the ISA Server computer no longer functions.

You issue a command to view the active connections on the ISA Server computer.

The output of the command is shown in the exhibit. (Click the Exhibit button.)

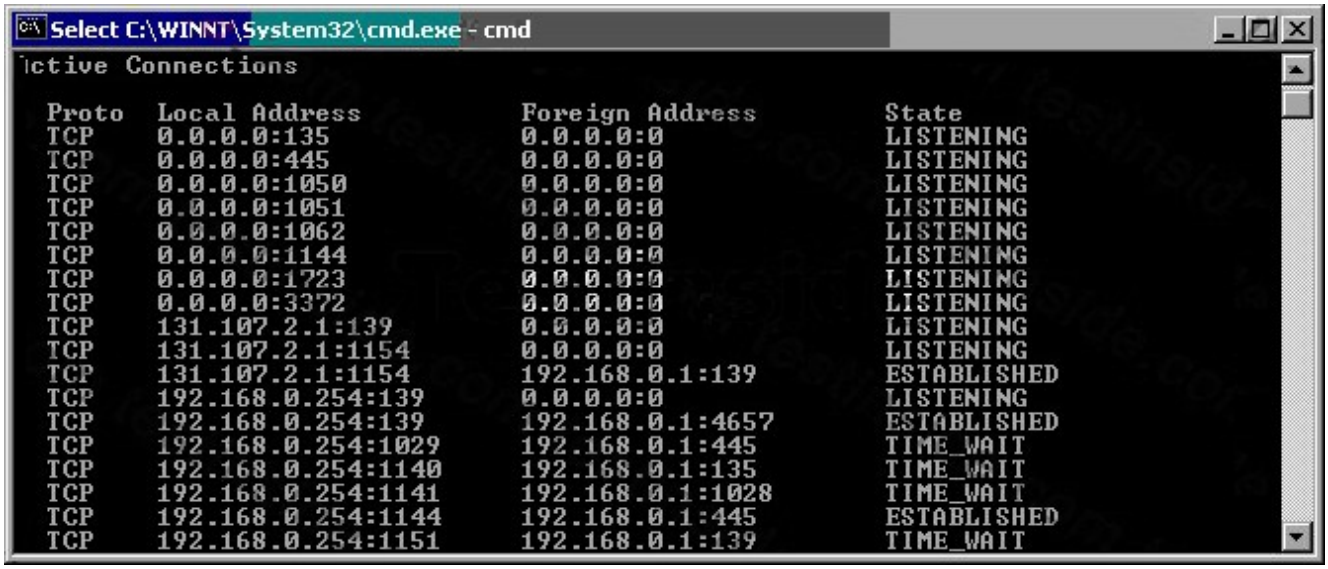

```
Select C:\WINNT\System32\cmd.exe - cmd
ctive Connections

  Proto  Local Address          Foreign Address        State
  TCP    0.0.0.0:135            0.0.0.0:0              LISTENING
  TCP    0.0.0.0:445            0.0.0.0:0              LISTENING
  TCP    0.0.0.0:1050           0.0.0.0:0              LISTENING
  TCP    0.0.0.0:1051           0.0.0.0:0              LISTENING
  TCP    0.0.0.0:1062           0.0.0.0:0              LISTENING
  TCP    0.0.0.0:1144           0.0.0.0:0              LISTENING
  TCP    0.0.0.0:1723           0.0.0.0:0              LISTENING
  TCP    0.0.0.0:3372           0.0.0.0:0              LISTENING
  TCP    131.107.2.1:139        0.0.0.0:0              LISTENING
  TCP    131.107.2.1:1154       0.0.0.0:0              LISTENING
  TCP    131.107.2.1:1154       192.168.0.1:139        ESTABLISHED
  TCP    192.168.0.254:139      0.0.0.0:0              LISTENING
  TCP    192.168.0.254:139      192.168.0.1:4657       ESTABLISHED
  TCP    192.168.0.254:1029     192.168.0.1:445        TIME_WAIT
  TCP    192.168.0.254:1140     192.168.0.1:135        TIME_WAIT
  TCP    192.168.0.254:1141     192.168.0.1:1028       TIME_WAIT
  TCP    192.168.0.254:1144     192.168.0.1:445        ESTABLISHED
  TCP    192.168.0.254:1151     192.168.0.1:139        TIME_WAIT
```

You want to restore Web server functionality to the ISA Server computer.

You will use the Microsoft Management Console (MMC) to accomplish this goal.

Which two actions should you take? (Each correct answer presents part of the solution. Choose two.)

A. In the MMC for Internet Information Services (IIS), change the port used by the Web server to TCP port 8080. Start the WWW Publishing Service.

B. In the MMC for Internet Information Services (IIS), change the port used by the Web server to TCP port 81. Start the WWW Publishing Service.

C. In the MMC for ISA Server, create a site and content rule that allows IP traffic to all internal destinations.

D. In the MMC for ISA Server, create a Web publishing rule that redirects external HTTP requests to the internal network adapter of the ISA Server.

E. In the MMC for ISA Server, create a packet filter that allows external traffic on the TCP port used for

HTTP requests.

Answer: BD

27. You are the administrator of your company's network. The network consists of a single Active Directory forest that contains five Microsoft Windows 2000 domains. All client computers on the network run Windows 2000 Professional and use Microsoft Internet Explorer 5.5 to connect to the Internet. All client computers are in the domains. Windows NT Server 4.0 computers that run Microsoft Proxy Server 2.0 control Internet access.

You want to migrate the Windows NT Server 4.0 computers that run Proxy Server to Windows 2000 Server computers that run ISA Server. You stop the Proxy Server services. You upgrade the Windows NT Server 4.0 computers to Windows 2000, and then you install ISA Server on the Windows 2000 Server computers. After the migration, users report that they cannot connect to the Internet.

You want to change the configuration of the Windows 2000 Professional computers so that users can connect to the Internet. What should you do?

A. Configure the default gateways to the internal IP address of an ISA Server computer.

B. Install the Firewall Client software on the Windows 2000 Professional computers.

C. Configure Internet Explorer to use proxy port 8080.

D. Configure Internet Explorer so that it does not bypass the proxy server for local addresses.

Answer: C

28. You are the administrator of your company's network. The network consists of a single Active Directory forest that contains three Microsoft Windows 2000 domains. Users on the network use different Web browsers to connect to the Internet. Windows NT Server 4.0 computers that run Microsoft Proxy Server 2.0 control Internet access. Company policy states that all outgoing requests to the Internet must be authenticated.

You want to migrate the Windows NT Server 4.0 computers that run Proxy Server to Windows 2000 Server computers that run ISA Server. You stop the Proxy Server services. You upgrade the Windows NT Server 4.0 computers to Windows 2000, and then you install ISA Server on the Windows 2000 Server computers. You configure the listener for outgoing Web requests to use port 80.After the migration, some users report that they cannot connect to the Internet. Other users report no difficulty connecting to the Internet.

You want to ensure that all users can connect to the Internet. What should you do?

A. Enable the Publish automatic discovery information option for port 8080.

B. Enable Basic authentication for outgoing Web requests.

C. Disable Integrated Windows authentication for outgoing Web requests.

D. Configure listeners individually per IP address for outgoing Web requests.

E. Enable the Ask unauthenticated users for identification option for outgoing Web requests.

Answer: B

29. You install an ISA Server computer on your network. However, you discover that you cannot browse the Internet from this server. You need to resolve this problem so you can browse the Internet from the ISA Server computer and from all client computers on your network. Which two actions should you take? (Each correct answer presents part of the solution. Choose two.)

A. Add a protocol rule that always allows Web protocol traffic.

B. Add the IP address of the internal network adapter of the ISA Server computer to the locallat.txt file.

C. Reconfigure the local address table of the ISA Server computer to exclude the IP address of the internal network adapter.

D. Configure the HTTP proxy settings of the browser on the ISA Server computer to use the external IP address of the ISA Server computer.

E. Configure the HTTP proxy settings of the browser on the ISA Server computer to use the internal IP address of the ISA Server computer.

Answer: AE

30. You are the administrator of a Microsoft Windows 2000 network that consists of a single Windows 2000 domain. You want to install ISA Server on a member server in this domain. You log on to the domain by using an account that has sufficient permissions to set up software on the member server. However, when you run the Enterprise Initialization utility to update the schema, you receive this error message:

You need to resolve this problem and resume the installation of ISA Server. What should you do?

A. Use the run as command to launch the Enterprise Initialization utility in the security context of an account that belongs to the Schema Admins group.

B. Use the run as command to launch the Enterprise Initialization utility in the security context of an account that belongs to the Domain Admins group for the domain.

C. Add the Active Directory snap-in to manage the schema. In the Active Directory schema console, configure the interface to allow schema updates.

D. Add the Active Directory snap-in to manage the schema. In the Active Directory schema console, transfer the schema master to the ISA Server computer.

Answer: A