IT-DUMPS Q&A

Accurate study guides, High passing rate!
IT-dumps provides update free of charge in one year!

http://www.it-dumps.com

Exam : **640-861**

Title : CCDA Cisco Certified Design Associate

Version : DEMO

1. AAA Video operates a chain of 50 video rental stores located in the Northwestern United States. They currently have a Point-of-Sale (POS) system in which each store posts its daily sales data and inventory changes to a central database through dial-up communication. There is no interaction between the stores and the central system during business hours. The central site runs on an Ethernet LAN. The only always-on WAN link is an Internet connection using wireless broadband to a local ISP. AAA wants to enhance their service offering by creating a new E-Commerce web site where customers can browse and search a catalog of video titles and select the ones they want for rental. The system will instantly communicate the order to the nearest store where employees pull the order and hold it until the customer picks it up. The service must operate on a 24x7 basis. AAA sees this new business strategy as a means to increase revenue and expand the business nationally. They see an opportunity to expand the web site in the future to video, DVD and music sales on a worldwide level. The company wants all stores to be connected to the central site through WAN links. The company is upgrading the central inventory database so that sales and rentals can be posted immediately in real-time. An Internet-based email and instant-messaging system will be set up for all headquarters employees and store managers to use. AAA believes that networking the stores will improve order fulfillment processes which will improve customer satisfaction and thus, boost revenue. It will also help communication with store employees. AAA wants to upgrade the local LAN to a Gigabit and Fast Ethernet system to facilitate the demands of the new and upgraded systems. They have budgeted $500,000 for the networking equipment and another $10,000/month for the WAN charges including a faster Internet connection. They believe that 256Kbps speeds will be adequate to the stores. Since they have no staff capable of managing the new network, they will hire two engineers that already have the training and experience. The project must be complete in 6 months when the new inventory system goes online. The IT manager has concerns about the security of the servers and workstations on the network when all stores become connected. He doesn't want any Internet access to or from the stores. He is depending on you to recommend an effective yet affordable solution that will protect his system from intruders.Which two are business constraints imposed by the AAA Video Company on this new network design project? (Choose two.)

A. the $10,000/month WAN budget

B. the installation of WAN links to all stores

C. the lack of any existing IT staff

D. video sales through the global Internet

E. real-time posting of store sales

Answer: AC

2. An existing Cisco customer has called for help with designing a new solution for its changing needs. The first issues the customer wants to address are security, logging, and troubleshooting. On which major functional area and which submodule of the Enterprise Composite Network Model will you be keying your efforts?

A. Enterprise Edge; Internet Connectivity

B. Enterprise Campus; Network Management

C. Service Provider; ISP

D. Campus Infrastructure; Building Access

E. Enterprise Campus; Campus Infrastructure

F. Edge Distribution; Call Detail Log

Answer: B

3. During which phase of the PDIOO process should the implementation be planned?

A. planning

B. designing

C. implementing

D. operating

E. optimizing

F. instigating

Answer: B

4. Which three items should be included in a summary report that validates the findings of the information you have gathered when characterizing a network? (Choose three.)

A. network services map

B. network problems and drawbacks

C. modularized network

D. network features

E. network applications map

F. actions that support network requirements

Answer: BDF

5. Analysis and recommendations in a Draft Design Document are based on which two features? (Choose two.)

A. logical topology map

B. collected information

C. physical topology map

D. hardware platform

E. design requirements

F. software versions

Answer: BE

6. For the network backbone of a large campus environment, what are three advantages of a multilayer core switch design over a Layer 2 core switch design? (Choose three.)

A. single VLAN implementation in the backbone

B. reduced distribution router peering

C. broadcast control in the backbone

D. evenly distributed backbone traffic

E. large scalability potential

Answer: BCE

7. Which two results of segment analysis are approximate thresholds that indicate network enhancement is desired? (Choose two.)

A. 25 percent broadcasts/multicasts

B. 30 percent broadcasts/multicasts

C. 1 CRC error per one million bytes

D. 1 CRC error per 100,000 bytes

E. 20 percent broadcasts/multicasts

F. 1 CRC error per 1000 bytes

Answer: CE

8. Refer to the exhibit. Which Campus Backbone Design does this most likely represent?

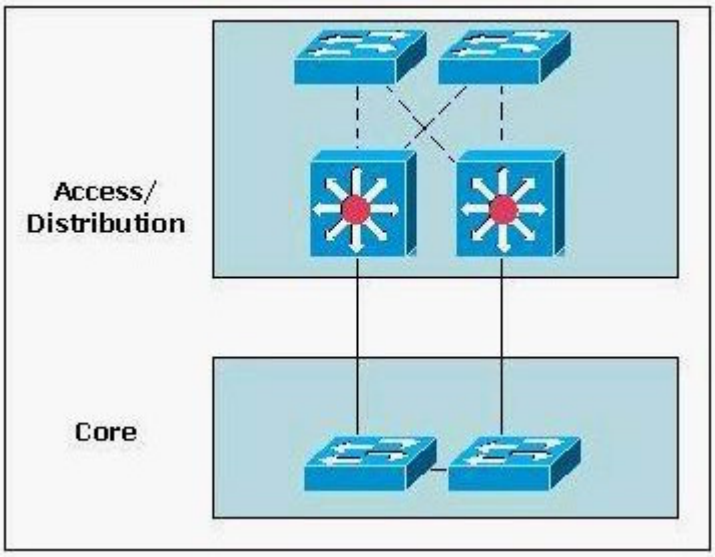

A. Single VLAN Layer 2

B. Split VLAN Layer 2

C. Layer 3 VLAN

D. Dual Path Layer 3 VLAN

Answer: A

9. Which organizational constraint most directly affects the social requirements of a business?

A. budget

B. personnel

C. policy

D. schedule

Answer: B

10. An enterprise needs to connect networks at high data rates. The networks are located in different buildings with a clear line-of-sight. Which technology is a solution for this need?

A. broadband fixed wireless

B. cellular wireless

C. wireless LAN

D. Mobile IP

E. ISDN

Answer: A

11. Western Associated News Agency recently acquired a large news organization with several sites, which will allow it to expand to worldwide markets. The new acquisition brings with it a multitude of connectivity technologies, including Frame Relay, ATM, SONET, cable, DSL, and wireless. Which Enterprise Edge module will receive the most attention from a Layer 1 viewpoint?

A. ISP

B. PSTN

C. Internet Connectivity

D. WAN

E. E-Commerce

F. Edge Distribution

Answer: D

12. A company is migrating from IPv4 to IPv6. IP addresses are assigned to workstations using DHCP.Which three options can be considered to assign addresses to workstations using IPv6? (Choose three.)

A. DHCPv6

B. DNS server

C. manual configuration

D. distributed address resolution

E. link local address

Answer: ACE

13. Which kind of address translation is best when the servers on the internal network with private IPv4 addresses must be visible from the public network?

A. many-to-one translation (PAT)

B. many-to-one translation (Dynamic NAT)

C. one-to-one translation (Static NAT)

D. one-to-one translation (NAT Traversal)

Answer: C

14. Which IPv4 to IPv6 transition strategy uses an intermediate device that can translate either at the transport layer or the network layer?

A. dual-stack

B. tunneling

C. DSTM

D. NAT-PT

E. automatic

Answer: D

15. A customer requires that a network designer show proof of concept for a redesigned remote access solution that will be implemented in the Enterprise Edge functional area of an existing network. Budget and time constraints require testing in only a portion of the existing Remote Access module.Which kind of test will be used to show proof of concept?

A. pilot

B. prototype

C. simulation

D. isolated

Answer: A

16. FloCzar Boats is a marine transportation company that has undergone a period of rapid growth in the past year. The company has some issues with the Network Management design, and would like to enhance the information that is available about the devices. It seems that only static information can be obtained, and FloCzar would like to be able to get information that will help to perform long-term trend analysis. The company is specifically concerned with Layer 4. Which management protocol will best meet

the goals?

A. RMON

B. SNMP

C. NetFlow

D. CDP

E. RMON2

Answer: E

17. Access to airline scheduling systems is a mission critical requirement of a new network upgrade at a travel agency. A service level agreement (SLA) is included in the design to assure a high level of availability.Which three capabilities must be included in the network design to manage the SLA? (Choose three.)

A. the identification and isolation of the SLA devices that cause an outage

B. the monitoring for conformance to the SLA

C. the determination of fault when an SLA is violated

D. the restoration of the configurations of failed devices covered by the SLA

E. the reporting of SLA violations and performance trends

Answer: BCE

18. The two networks shown in the diagram have very different traffic patterns, as illustrated by the black arrows. Network A has two departments organized in separate VLANs. Each department VLAN contains the servers and printers that are used by the department personnel. The only common resource used by both departments is the email server, located on a remote network. Network B also has two departments organized in separate VLANs. All of the applications used by both departments are located on common database servers. The common database servers are located in a server farm on a separate network from the users. Which three statements are true about the networks in this diagram? (Choose three.)

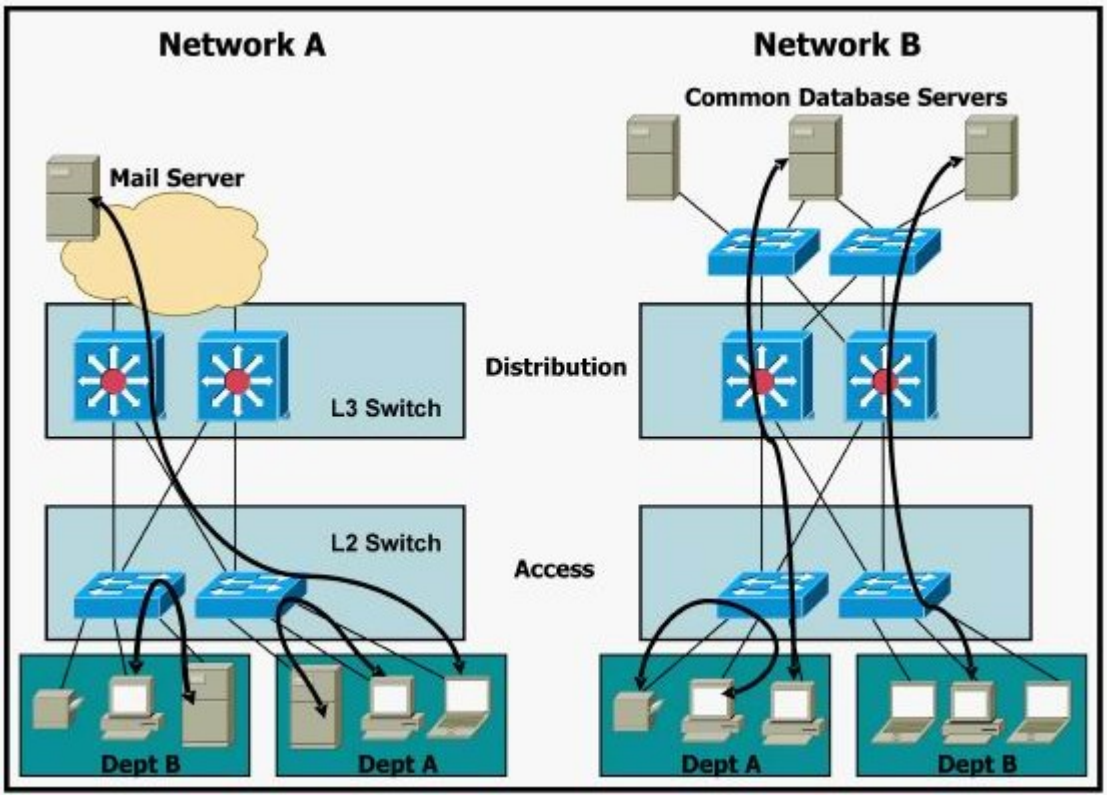

A. Network A is designed to accommodate file transfers from other department servers on a frequent basis.

B. The design in Network B will require a higher performance Layer 3 switch.

C. Network B illustrates the 20/80 rule.

D. Network B is designed so that distribution layer switches concentrate users in their own VLANs.

E. Network A is designed to keep 80% of the traffic within the local workgroup.

F. Network A is designed have 80% of the traffic pass through the Layer 3 switches.

Answer: BCE

19. Which three security measures can be used to DoS attacks that are directed at exposed hosts within the E-Commerce module? (Choose three.)

A. Place the exposed hosts on isolated LANs.

B. Use firewalls to block all unnecessary connections to the exposed hosts.

C. Use LAN switch access-control mechanisms, such as VTP pruning, to separate hosts on the same segment.

D. Use NIDSs and HIDSs to monitor individual hosts and subnets to detect signs of attack and to identify potentially successful breaches.

E. Use a VPN concentrator (IPSec) to protect and verify each connection to the exposed host or hosts.

Answer: ABD

20. AAA Video operates a chain of 50 video rental stores located in the Northwestern United States. They currently have a Point-of-Sale (POS) system in which each store posts its daily sales data and inventory changes to a central database through dial-up communication. There is no interaction between the stores and the central system during business hours. The central site runs on an Ethernet LAN. The only always-on WAN link is an Internet connection using wireless broadband to a local ISP. AAA wants to enhance their service offering by creating a new E-Commerce web site where customers can browse and search a catalog of video titles and select the ones they want for rental. The system will instantly communicate the order to the nearest store where employees pull the order and hold it until the customer picks it up. The service must operate on a 24x7 basis. AAA sees this new business strategy as a means to increase revenue and expand the business nationally. They see an opportunity to expand the web site in the future to video, DVD and music sales on a worldwide level. The company wants all stores to be connected to the central site through WAN links. The company is upgrading the central inventory database so that sales and rentals can be posted immediately in real-time. An Internet-based email and instant-messaging system will be set up for all headquarters employees and store managers to use. AAA believes that networking the stores will improve order fulfillment processes which will improve customer satisfaction and thus, boost revenue. It will also help communication with store employees. AAA wants to upgrade the local LAN to a Gigabit and Fast Ethernet system to facilitate the demands of the new and upgraded systems. They have budgeted $500,000 for the networking equipment and another $10,000/month for the WAN charges including a faster Internet connection. They believe that 256Kbps speeds will be adequate to the stores. Since they have no staff capable of managing the new network, they will hire two engineers that already have the training and experience. The project must be complete in 6 months when the new inventory system goes online. The IT manager has concerns about the security of the servers and workstations on the network when all stores become connected. He doesn't want any Internet access to or from the stores. He is depending on you to recommend an effective yet affordable solution that will protect his system from intruders.What are three technical goals of AAA Video with regard to this network design project? (Choose three.)

A. sell merchandise through the E-Commerce site

B. real-time posting of sales

C. network security measures

D. hire two new network engineers

E. upgrade to a high-performance LAN

F. enhance service offerings

Answer: BCE